RESTRAINTS

08
SECTION

ON-BOARD DIAGNOSTIC 08-02
SYMPTOM
TROUBLESHOOTING 08-03
AIR BAG SYSTEM 08-10
SEAT BELT 08-11
SERVICE TOOLS 08-60

08–02 ON-BOARD DIAGNOSTIC

FOREWORD 08–02–1
AIR BAG SYSTEM WIRING DIAGRAM (ON-BOARD DIAGNOSTIC) 08–02–2
DTC DISPLAY 08–02–3
CLEARING DTC 08–02–3
DTC TABLE 08–02–3
PID/DATA MONITOR DISPLAY 08–02–7
PID/DATA MONITOR TABLE 08–02–8
DTC B1046, B2773, B2774, B2775, B2776 08–02–9
DTC B1047, B1992, B1993, B1994, B1995 08–02–11
DTC B1051, U2017 08–02–13
DTC B104F, U2018 08–02–15
DTC B2226, B2227 08–02–17
DTC B1055, B1996, B1997, B1998, B1999 08–02–19
DTC B1056, B2777, B2778, B2779, B2780 08–02–21
DTC B1058, B2228, B2230, B2232, B2234 08–02–23
DTC B1059, B2229, B2231, B2233, B2235 08–02–24
DTC B1144, B1145 08–02–24
DTC B1146, B1147 08–02–26
DTC B1318 08–02–28
DTC B1342 08–02–29
DTC B1869 08–02–30
DTC B1871 08–02–32
DTC B1877, B1878, B1879, B1885 08–02–33
DTC B1881, B1882, B1883, B1886 08–02–35
DTC B1884 08–02–37
DTC B1916, B1932, B1934, B1936 08–02–39
DTC B1925, B1933, B1935, B1938 08–02–41
DTC B2477 08–02–44
DTC B104B, B104C, B104D, B2856, B2886, B2887 08–02–44
DTC B2867 08–02–45

FOREWORD

DPE080200000W01

Outline

- The OBD (on-board diagnostic) system has the following functions:
  — Malfunction detection function: Detects malfunctions in the air bag system and outputs DTCs.
  — Data monitor function: Reads out specific input/output signals and the system status.
- Diagnostic DTCs can be read/cleared using the WDS or equivalent.

AIR BAG SYSTEM WIRING DIAGRAM (ON-BOARD DIAGNOSTIC)

DPE080200000W02

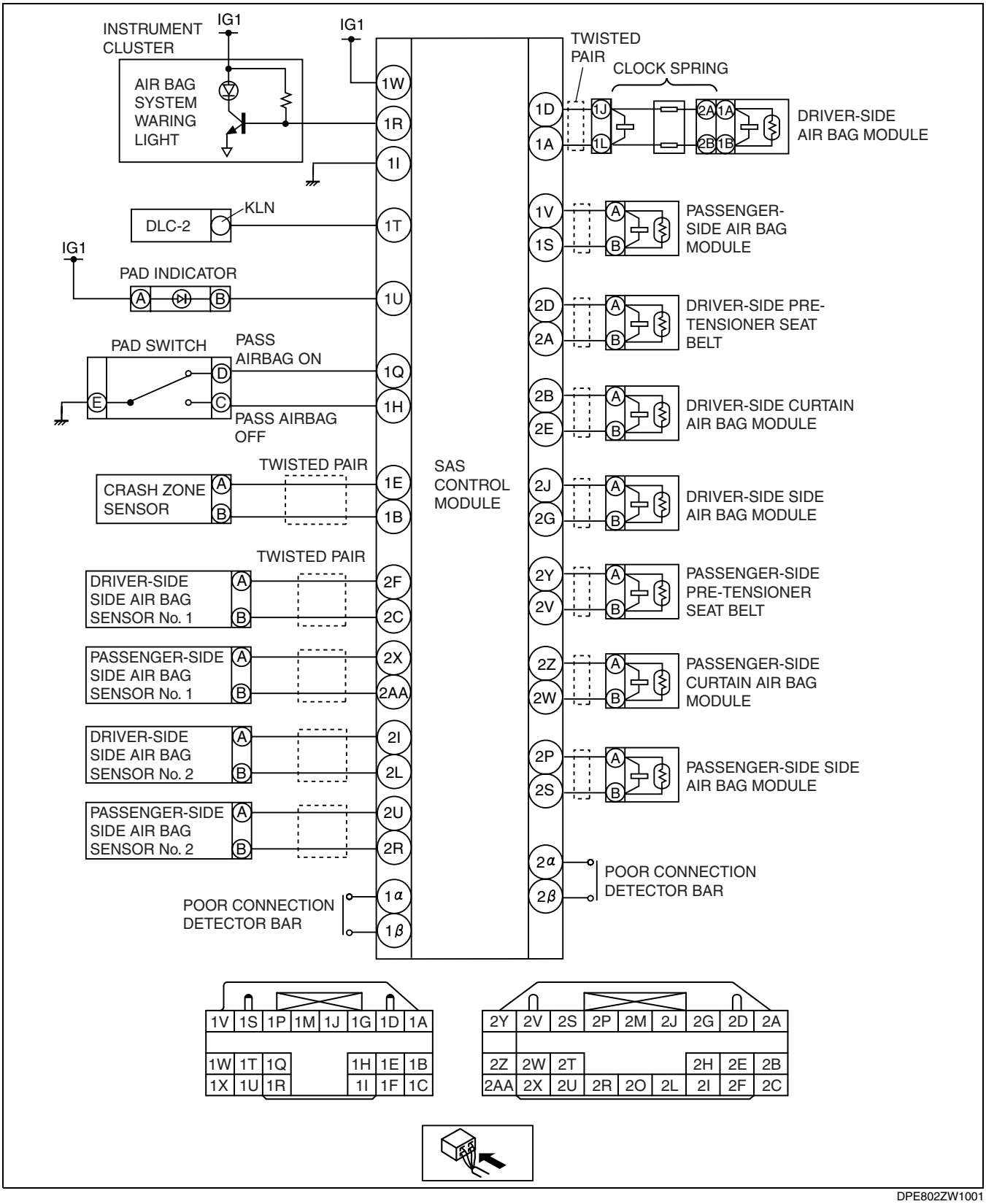

DPE802ZW1001

DTC DISPLAY

DPE080200000W03

1. Connect the WDS or equivalent to the DLC-2 connector (16-pin).
2. Retrieve DTCs.

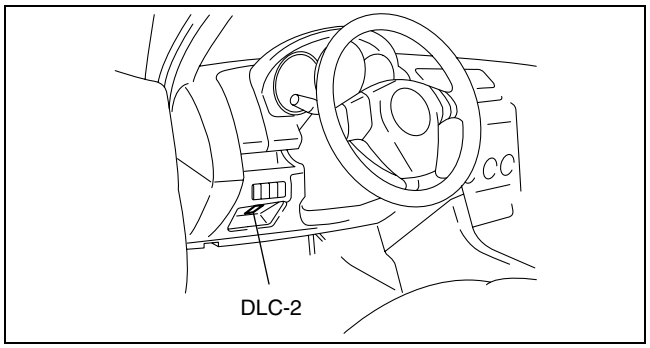

DPE102ZW2001

CLEARING DTC

DPE080200000W04

1. After repairs have been made, retrieve DTCs.
2. Using the WDS or equivalent, clear DTCs from the memory.
3. Perform the DTC inspection again and verify that no DTC is displayed.

DTC TABLE

DPE080200000W34

- DTCs are common for present and past malfunction diagnosis.

Note

- When DTCs not shown in the DTC table are displayed, replace the SAS control module.
- If the air bag system warning light does not illuminate or remains illuminated when the ignition switch is turned to the ON position, inspect and repair the air bag system warning light circuit, and then confirm that the air bag system warning light is operational.
- The air bag system warning light flashes the DTC pattern for five cycles, and then remains illuminated until the ignition switch is turned to the LOCK position.
- If the SAS control module configuration is performed while the SRS air bag system circuit has a malfunction, the air bag system warning light flashes. Verify that the warning light goes out approx. 15 s after the system circuit malfunction is solved.

DTC				System malfunction location	Page
WDS display	Air bag system warning light				
	Flashing pattern		Priority ranking		
B1046	24		10	Driver-side curtain air bag module assembly incorrect	(See 08–02–9 DTC B1046, B2773, B2774, B2775, B2776.)
B1047	22		8	Driver-side side air bag module assembly incorrect	(See 08–02–11 DTC B1047, B1992, B1993, B1994, B1995.)
B104B	63		16	Driver-side side air bag sensor No. 1 assembly incorrect	(See 08–02–44 DTC B104B, B104C, B104D, B2856, B2886, B2887.)
B104C	64		17	Passenger-side side air bag sensor No. 1 assembly incorrect	(See 08–02–44 DTC B104B, B104C, B104D, B2856, B2886, B2887.)
B104D	42		14	Crash zone sensor assembly incorrect	(See 08–02–44 DTC B104B, B104C, B104D, B2856, B2886, B2887.)
B104F	64		17	Passenger-side side air bag sensor No. 1 system internal circuit disabled	(See 08–02–15 DTC B104F, U2018.)
B1051	63		16	Driver-side side air bag sensor No. 1 system internal circuit disabled	(See 08–02–13 DTC B1051, U2017.)

DTC				System malfunction location	Page
WDS display	Air bag system warning light				
		Flashing pattern	Priority ranking		
B1055	23		9	Passenger-side side air bag module assembly incorrect	(See 08–02–19 DTC B1055, B1996, B1997, B1998, B1999.)
B1056	25		11	Passenger-side curtain air bag module assembly incorrect	(See 08–02–21 DTC B1056, B2777, B2778, B2779, B2780.)
B1058 B2228 B2230 B2232 B2234	19		6	Driver-side air bag module assembly incorrect	(See 08–02–23 DTC B1058, B2228, B2230, B2232, B2234.)
B1059 B2229 B2231 B2233 B2235	21		7	Passenger-side air bag module assembly incorrect	(See 08–02–24 DTC B1059, B2229, B2231, B2233, B2235.)
B1144	46		18	Driver-side side air bag sensor No. 2 system internal circuit disabled	(See 08–02–24 DTC B1144, B1145.)
B1145				Driver-side side air bag sensor No. 2 system communication error	
B1146	47		19	Passenger-side side air bag sensor No. 2 system internal circuit disabled	(See 08–02–26 DTC B1146, B1147.)
B1147				Passenger-side side air bag sensor No. 2 system communication error	
B1318	—	Continuously illuminated	—	The power supply voltage decreases (less than 9 V)	(See 08–02–28 DTC B1318.)
B1342	12		4	SAS control module	(See 08–02–29 DTC B1342.)
B1869	—	Continuously illuminated	—	Air bag system warning light circuit open	(See 08–02–30 DTC B1869.)
	—	Continuously illuminated	—	Air bag system warning light circuit short to body ground	
B1871	56		24	Passenger air bag deactivation (PAD) switch system circuit disabled	(See 08–02–32 DTC B1871.)
B1877	33		12	Driver-side pre-tensioner seat belt circuit resistance high	(See 08–02–33 DTC B1877, B1878, B1879, B1885.)
B1878				Driver-side pre-tensioner seat belt circuit short to power supply	
B1879				Driver-side pre-tensioner seat belt circuit short to body ground	

DTC				System malfunction location	Page
WDS display	Air bag system warning light				
	Flashing pattern		Priority ranking		
B1881	34		13	Passenger-side pre-tensioner seat belt circuit resistance high	(See 08–02–35 DTC B1881, B1882, B1883, B1886.)
B1882				Passenger-side pre-tensioner seat belt circuit short to power supply	
B1883				Passenger-side pre-tensioner seat belt circuit short to body ground	
B1884	18		26	Passenger air bag deactivation (PAD) indicator circuit open or short to body ground	(See 08–02–37 DTC B1884.)
B1885	33		12	Driver-side pre-tensioner seat belt circuit resistance low	(See 08–02–33 DTC B1877, B1878, B1879, B1885.)
B1886	34		13	Passenger-side pre-tensioner seat belt circuit resistance low	(See 08–02–35 DTC B1881, B1882, B1883, B1886.)
B1916	19		6	Driver-side air bag module circuit short to power supply	(See 08–02–39 DTC B1916, B1932, B1934, B1936.)
B1925	21		7	Passenger-side air bag module circuit short to power supply	(See 08–02–41 DTC B1925, B1933, B1935, B1938.)
B1932	19		6	Driver-side air bag module circuit resistance high	(See 08–02–39 DTC B1916, B1932, B1934, B1936.)
B1933	21		7	Passenger-side air bag module circuit resistance high	(See 08–02–41 DTC B1925, B1933, B1935, B1938.)
B1934	19		6	Driver-side air bag module circuit resistance low	(See 08–02–39 DTC B1916, B1932, B1934, B1936.)
B1935	21		7	Passenger-side air bag module circuit resistance low	(See 08–02–41 DTC B1925, B1933, B1935, B1938.)
B1936	19		6	Driver-side air bag module circuit short to body ground	(See 08–02–39 DTC B1916, B1932, B1934, B1936.)
B1938	21		7	Passenger-side air bag module circuit short to body ground	(See 08–02–41 DTC B1925, B1933, B1935, B1938.)

DTC				System malfunction location	Page
WDS display	Air bag system warning light				
	Flashing pattern		Priority ranking		
B1992	22		8	Driver-side side air bag module circuit short to power supply	(See 08–02–11 DTC B1047, B1992, B1993, B1994, B1995.)
B1993				Driver-side side air bag module circuit short to body ground	
B1994				Driver-side side air bag module circuit resistance high	
B1995				Driver-side side air bag module circuit resistance low	
B1996	23		9	Passenger-side side air bag module circuit short to power supply	(See 08–02–19 DTC B1055, B1996, B1997, B1998, B1999.)
B1997				Passenger-side side air bag module circuit short to body ground	
B1998				Passenger-side side air bag module circuit resistance high	
B1999				Passenger-side side air bag module circuit resistance low	
B2226	42		14	Crash zone sensor system internal circuit disabled	(See 08–02–17 DTC B2226, B2227.)
B2227				Crash zone sensor system communication error	
B2477	54		2	Configuration error	(See 08–02–44 DTC B2477.)
B2773	24		10	Driver-side curtain air bag module circuit resistance low	(See 08–02–9 DTC B1046, B2773, B2774, B2775, B2776.)
B2774				Driver-side curtain air bag module circuit resistance high	
B2775				Driver-side curtain air bag module circuit short to body ground	
B2776				Driver-side curtain air bag module circuit short to power supply	
B2777	25		11	Passenger-side curtain air bag module circuit resistance low	(See 08–02–21 DTC B1056, B2777, B2778, B2779, B2780.)
B2778				Passenger-side curtain air bag module circuit resistance high	
B2779				Passenger-side curtain air bag module circuit short to body ground	
B2780				Passenger-side curtain air bag module circuit short to power supply	
B2856	42		14	Crash zone sensor system communication data error	(See 08–02–44 DTC B104B, B104C, B104D, B2856, B2886, B2887.)

DTC				System malfunction location	Page
WDS display	Air bag system warning light				
	Flashing pattern		Priority ranking		
B2867	31		3	Poor connection of any SAS unit connectors	(See 08–02–45 DTC B2867.)
B2886	64		17	Passenger-side side air bag sensor No. 1 system communication data error	(See 08–02–44 DTC B104B, B104C, B104D, B2856, B2886, B2887.)
B2887	63		16	Driver-side side air bag sensor No. 1 system communication data error	(See 08–02–44 DTC B104B, B104C, B104D, B2856, B2886, B2887.)
U2017	63		16	Driver-side side air bag sensor No. 1 system communication error	(See 08–02–13 DTC B1051, U2017.)
U2018	64		17	Passenger-side side air bag sensor No. 1 system communication error	(See 08–02–15 DTC B104F, U2018.)

PID/DATA MONITOR DISPLAY

1. Connect the WDS or equivalent to the DLC-2 connector (16-pin).
2. Display the data monitor items.

DPE080200000W06

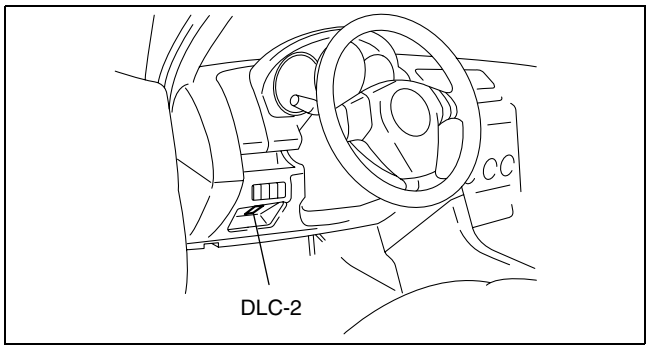

DPE102ZW2001

PID/DATA MONITOR TABLE

DPE080200000W07

PID/data monitor table

PID name (definition)	Unit/Condition	Operation Condition (Reference)	Terminal
CCNT_RCM (Number of continuous DTCs)	—	• DTCs detected: 1—255 • No DTCs detected: 0	—
CR2D_Comm (Driver-side side air bag sensor No. 2 system communication data error)	OK/ FAULT	• Sensor normal: OK • Sensor communication malfunction: FAULT	2I, 2L
CR2D_Inter (Driver-side side air bag sensor No. 2 system internal circuit disabled)	OK/ FAULT	• Sensor normal: OK • Sensor internal malfunction: FAULT	2I, 2L
CR2D_Mount (Driver-side side air bag sensor No. 2 assembly incorrect)	OK/ FAULT	• Sensor normal: OK • Sensor Install malfunction: FAULT	2I, 2L
CR2D_Short (Driver-side side air bag sensor No. 2 system communication error)	OK/ FAULT	• Sensor normal: OK • Sensor open or short circuit: FAULT	2I, 2L
CR2P_Comm (Passenger-side side air bag sensor No. 2 system communication data error)	OK/ FAULT	• Sensor normal: OK • Sensor communication malfunction: FAULT	2U, 2R
CR2P_Inter (Passenger-side side air bag sensor No. 2 system internal circuit disabled)	OK/ FAULT	• Sensor normal: OK • Sensor internal malfunction: FAULT	2U, 2R
CR2P_Mount (Passenger-side side air bag sensor No. 2 assembly incorrect)	OK/ FAULT	• Sensor normal: OK • Senso Install malfunction: FAULT	2U, 2R
CR2P_Short (Passenger-side side air bag sensor No. 2 system communication error)	OK/ FAULT	• Sensor normal: OK • Sensor open or short circuit: FAULT	2U, 2R
IGN_V_2 (IG1 voltage)	V	• Ignition switch is at ON: B+ • Other: 0	—
I_PAD_SW (PAD switch status)	On/ Off	• PAD switch is at PASS AIRBAG ON position: On • PAD switch is at PASS AIRBAG OFF position: Off	—
RES_AB_D (Driver-side air bag module resistance)	ohm	Under any condition: 1.5—4.7 ohms	1A, 1D
RES_AB_P (Passenger-side air bag module resistance)	ohm	Under any condition: 1.3—4.7 ohms	1V, 1S
RES_CAB_D (Driver-side curtain air bag module resistance)	ohm	Under any condition: 1.3—4.7 ohms	2B, 2E
RES_CAB_P (Passenger-side curtain air bag module resistance)	ohm	Under any condition: 1.3—4.7 ohms	2Z, 2W
RES_PT_D (Driver-side pre-tensioner seat belt resistance)	ohm	Under any condition: 1.3—4.7 ohms	2A, 2D
RES_PT_P (Passenger-side pre-tensioner seat belt resistance)	ohm	Under any condition: 1.3—4.7 ohms	2Y, 2V
RES_SAB_D (Driver-side side air bag module resistance)	ohm	Under any condition: 1.3—4.7 ohms	2J, 2G
RES_SAB_P (Passenger-side side air bag module resistance)	ohm	Under any condition: 1.3—4.7 ohms	2P, 2S

DTC B1046, B2773, B2774, B2775, B2776

DPE080200000W08

DTC	**B1046**	**Driver-side curtain air bag module assembly incorrect**
	B2773	**Driver-side curtain air bag module circuit resistance low**
	B2774	**Driver-side curtain air bag module circuit resistance high**
	B2775	**Driver-side curtain air bag module circuit short to body ground**
	B2776	**Driver-side curtain air bag module circuit short to power supply**
DETECTION CONDITION		**Warning** • **Detection conditions are for understanding the DTC outline before performing an inspection. Performing an inspection according to only the detection conditions may cause injury due to an operating error, or damage the system. When performing an inspection, always follow the inspection procedure.** • Resistance other than **1.3—4.7 ohms** detected in driver-side curtain air bag module circuit • Malfunction in wiring harness between driver-side curtain air bag module and SAS control module
POSSIBLE CAUSE		• Open or short circuit in wiring harness between driver-side curtain air bag module and SAS control module • Driver-side curtain air bag module malfunction • SAS control module malfunction

SAS CONTROL MODULE WIRING HARNESS-SIDE CONNECTOR

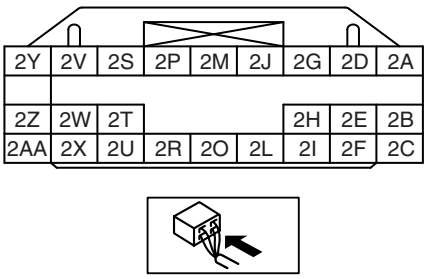

DRIVER-SIDE CURTAIN AIR BAG MODULE WIRING HARNESS-SIDE CONNECTOR

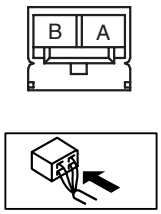

Diagnostic procedure

STEP	INSPECTION		ACTION
1	**INSPECT DRIVER-SIDE CURTAIN AIR BAG MODULE** • Using the WDS or equivalent, verify the following PID/DATA monitor. (See 08–02–8 PID/DATA MONITOR TABLE.) — RES_CAB_D • Is the resistance of the driver-side curtain air bag module normal? — Resistance: **1.3—4.7 ohms**	Yes	Replace the SAS control module. (See 08–10–10 SAS CONTROL MODULE REMOVAL/ INSTALLATION.)
		No	Go to the next step.
2	**INSPECT DRIVER-SIDE CURTAIN AIR BAG MODULE CONNECTOR** **Warning** • **Handling the air bag system components improperly can accidentally deploy the air bag modules and pre-tensioner seat belts, which may seriously injure you. Read the service warnings and cautions before handling the air bag system components.** **(See 08–10–2 SERVICE WARNINGS.)** **(See 08–10–4 SERVICE CAUTIONS.)** • Turn the ignition switch to the LOCK position. • Disconnect the negative battery cable and wait for **1 min or more**. • Remove the driver-side C-pillar trim. (See 09–17–17 C-PILLAR TRIM REMOVAL/ INSTALLATION.) • Disconnect the driver-side curtain air bag module connector. • Is there any malfunction of the driver-side curtain air bag module connector?	Yes	Replace the air bag wiring harness.
		No	Go to the next step.
3	**VERIFY WHETHER MALFUNCTION IS IN DRIVER-SIDE CURTAIN AIR BAG MODULE OR RELATED WIRING HARNESS** • Connect the leads of the **SST** (Fuel and thermometer checker) or apply **2-ohm** resistance to driver-side curtain air bag module connector terminals A and B. • Set the resistance of the **SST** (Fuel and thermometer checker) to the **2-ohm** position. • Connect the negative battery cable. • Turn the ignition switch to the ON position. • Are DTCs B1046, B2773, B2774, B2775 and/or B2776 indicated?	Yes	Replace the air bag wiring harness, then go to the next step.
		No	Replace the driver-side curtain air bag module. (See 08–10–8 CURTAIN AIR BAG MODULE REMOVAL/ INSTALLATION.)

STEP	INSPECTION		ACTION
4	**INSPECT WIRING HARNESS BETWEEN DRIVER-SIDE CURTAIN AIR BAG MODULE AND SAS CONTROL MODULE** • Turn the ignition switch to the LOCK position. • Disconnect the negative battery cable and wait for **1 min or more**. • Disconnect the driver and passenger-side front seat connectors. • Disconnect the driver and passenger-side curtain air bag module connectors. • Remove the front console. • Inspect the wiring harness between SAS control module terminal 2B and driver-side curtain air bag module terminal A, SAS control module terminal 2E and driver-side curtain air bag module terminal B for the following: — Short to ground — Short to power supply — Open circuit • Is the wiring harness normal?	Yes	Replace the SAS control module. (See 08–10–10 SAS CONTROL MODULE REMOVAL/ INSTALLATION.)
		No	Replace the air bag wiring harness.

DTC B1047, B1992, B1993, B1994, B1995

DPE080200000W09

DTC	B1047	**Driver-side side air bag module assembly incorrect**
	B1992	**Driver-side side air bag module circuit short to power supply**
	B1993	**Driver-side side air bag module circuit short to body ground**
	B1994	**Driver-side side air bag module circuit resistance high**
	B1995	**Driver-side side air bag module circuit resistance low**
DETECTION CONDITION	**Warning** • **Detection conditions are for understanding the DTC outline before performing an inspection. Performing an inspection according to only the detection conditions may cause injury due to an operating error, or damage the system. When performing an inspection, always follow the inspection procedure.** • Resistance other than **1.3—4.7 ohms** detected in driver-side side air bag module circuit • Malfunction in wiring harness between driver-side side air bag module and SAS control module	
POSSIBLE CAUSE	• Open or short circuit in wiring harness between driver-side side air bag module and SAS control module • Driver-side side air bag module malfunction • SAS control module malfunction	

SAS CONTROL MODULE WIRING HARNESS-SIDE CONNECTOR

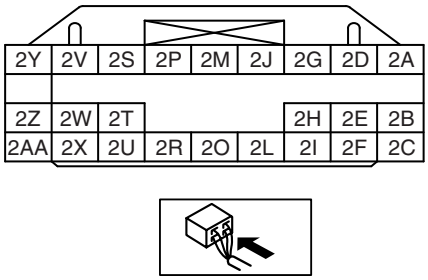

DRIVER-SIDE SIDE AIR BAG MODULE WIRING HARNESS-SIDE CONNECTOR

Diagnostic procedure

STEP	INSPECTION		ACTION
1	**INSPECT DRIVER-SIDE SIDE AIR BAG MODULE** • Using the WDS or equivalent, verify the following PID/DATA monitor. (See 08–02–8 PID/DATA MONITOR TABLE.) — RES_SAB_D • Is the resistance of the driver-side side air bag module normal? — Resistance: **1.3—4.7 ohms**	Yes	Replace the SAS control module. (See 08–10–10 SAS CONTROL MODULE REMOVAL/ INSTALLATION.)
		No	Go to the next step.
2	**INSPECT DRIVER-SIDE SIDE AIR BAG MODULE CONNECTOR** **Warning** • **Handling the air bag system components improperly can accidentally deploy the air bag modules and pre-tensioner seat belts, which may seriously injure you. Read the service warnings and cautions before handling the air bag system components.** **(See 08–10–2 SERVICE WARNINGS.)** **(See 08–10–4 SERVICE CAUTIONS.)** • Turn the ignition switch to the LOCK position. • Disconnect the negative battery cable and wait for **1 min or more**. • Remove the driver-side side air bag module. (See 08–10–7 SIDE AIR BAG MODULE REMOVAL/INSTALLATION.) • Disconnect the driver-side side air bag module connector. • Is there any malfunction of the driver-side side air bag module connector?	Yes	Replace the air bag wiring harness.
		No	Go to the next step.
3	**VERIFY WHETHER MALFUNCTION IS IN DRIVER-SIDE SIDE AIR BAG MODULE OR RELATED WIRING HARNESS** • Connect the leads of the **SST** (Fuel and thermometer checker) or apply **2-ohm** resistance to driver-side side air bag module connector terminals A and B. • Set the resistance of the **SST** (Fuel and thermometer checker) to the **2-ohm** position. • Connect the negative battery cable. • Turn the ignition switch to the ON position. • Are DTCs B1047, B1992, B1993, B1994, and/or B1995 indicated?	Yes	Go to the next step.
		No	Replace the driver-side side air bag module. (See 08–10–7 SIDE AIR BAG MODULE REMOVAL/ INSTALLATION.)

STEP	INSPECTION		ACTION
4	**INSPECT WIRING HARNESS BETWEEN DRIVER-SIDE SIDE AIR BAG MODULE AND SAS CONTROL MODULE** • Turn the ignition switch to the LOCK position. • Disconnect the negative battery cable and wait for **1 min or more**. • Disconnect the driver and passenger-side front seat connectors. • Disconnect the driver and passenger-side curtain air bag module connectors. • Remove the front console. • Inspect the wiring harness between SAS control module terminal 2J and driver-side side air bag module terminal A, SAS control module terminal 2G and driver-side side air bag module terminal B for the following: — Short to ground — Short to power supply — Open circuit • Is the wiring harness normal?	Yes	Replace the SAS control module. (See 08–10–10 SAS CONTROL MODULE REMOVAL/ INSTALLATION.)
		No	Replace the air bag wiring harness.

DTC B1051, U2017

DPE080200000W12

DTC	**B1051**	**Driver-side side air bag sensor No. 1 system internal circuit disabled**
	U2017	**Driver-side side air bag sensor No. 1 system communication error**
DETECTION CONDITION	**Warning** • **Detection conditions are for understanding the DTC outline before performing an inspection. Performing an inspection according to only the detection conditions may cause injury due to an operating error, or damage the system. When performing an inspection, always follow the inspection procedure.** • Malfunction in wiring harness between driver-side side air bag sensor No. 1 and SAS control module • Malfunction in driver-side side air bag sensor No. 1 circuit	
POSSIBLE CAUSE	• Open or short circuit in wiring harness between driver-side side air bag sensor No. 1 and SAS control module • Driver-side side air bag sensor No. 1 malfunction • SAS control module malfunction	

SAS CONTROL MODULE WIRING HARNESS-SIDE CONNECTOR

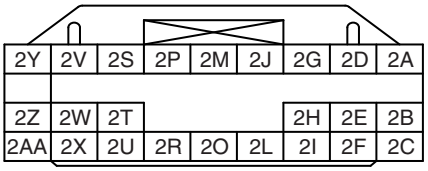

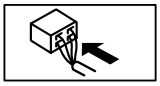

DRIVER-SIDE SIDE AIR BAG SENSOR NO. 1 WIRING HARNESS-SIDE CONNECTOR

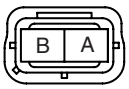

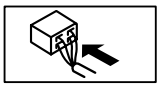

08

Diagnostic procedure

STEP	INSPECTION		ACTION
1	**INSPECT DRIVER-SIDE SIDE AIR BAG SENSOR NO. 1 CONNECTOR** **Warning** • **Handling the air bag system components improperly can accidentally deploy the air bag modules and pre-tensioner seat belts, which may seriously injure you. Read the service warnings and cautions before handling the air bag system components.** **(See 08–10–2 SERVICE WARNINGS.)** **(See 08–10–4 SERVICE CAUTIONS.)** • Turn the ignition switch to the LOCK position. • Disconnect the negative battery cable and wait for **1 min or more**. • Remove the driver-side front seat belt. (See 08–11–1 FRONT SEAT BELT REMOVAL/INSTALLATION.) • Disconnect the driver-side side air bag sensor No. 1 connector. • Is there any malfunction of the driver-side side air bag sensor No. 1 connector?	Yes	Replace the air bag wiring harness.
		No	Go to the next step.
2	**INSPECT WIRING HARNESS BETWEEN DRIVER-SIDE SIDE AIR BAG SENSOR NO. 1 AND SAS CONTROL MODULE** • Turn the ignition switch to the LOCK position. • Disconnect the negative battery cable and wait for **1 min or more**. • Disconnect the driver and passenger-side front seat connectors. • Remove the C-pillar trim. (See 09–17–17 C-PILLAR TRIM REMOVAL/INSTALLATION.) • Disconnect the driver and passenger-side curtain air bag module connectors. • Remove the front console. (See 09–17–13 FRONT CONSOLE REMOVAL/INSTALLATION.) • Disconnect the SAS control module connector. • Disconnect the driver-side side air bag sensor No. 1 connector. • Connect the negative battery cable. • Inspect the wiring harnesses between SAS control module terminal 2F and driver-side side air bag sensor No. 1 terminal A, SAS control module terminal 2C and driver-side side air bag sensor No. 1 terminal B for the following: — Short to ground — Short to power supply — Open circuit • Is the wiring harness normal?	Yes	Replace the driver-side side air bag sensor No. 1, then go to the next step. (See 08–10–11 SIDE AIR BAG SENSOR No. 1 REMOVAL/INSTALLATION.)
		No	Replace the air bag wiring harness.
3	**INSPECT SAS CONTROL MODULE** • Turn the ignition switch to the LOCK position. • Disconnect the negative battery cable and wait for **1 min or more**. • Connect the SAS control module connector. • Connect the driver-side side air bag sensor No. 1 connector. • Are DTCs B1051, U2017 indicated?	Yes	Replace the SAS control module. (See 08–10–10 SAS CONTROL MODULE REMOVAL/INSTALLATION.)
		No	DTC troubleshooting completed.

DTC B104F, U2018

DPE080200000W13

DTC	**B104F**	**Passenger-side side air bag sensor No. 1 system internal circuit disabled**
	U2018	**Passenger-side side air bag sensor No. 1 system communication error**
DETECTION CONDITION		**Warning** • **Detection conditions are for understanding the DTC outline before performing an inspection. Performing an inspection according to only the detection conditions may cause injury due to an operating error, or damage the system. When performing an inspection, always follow the inspection procedure.** • Malfunction in wiring harness between passenger-side side air bag sensor No. 1 and SAS control module • Malfunction in passenger-side side air bag sensor No. 1 circuit
POSSIBLE CAUSE		• Open or short circuit in wiring harness between passenger-side side air bag sensor No. 1 and SAS control module • Passenger-side side air bag sensor No. 1 malfunction • SAS control module malfunction

SAS CONTROL MODULE WIRING HARNESS-SIDE CONNECTOR

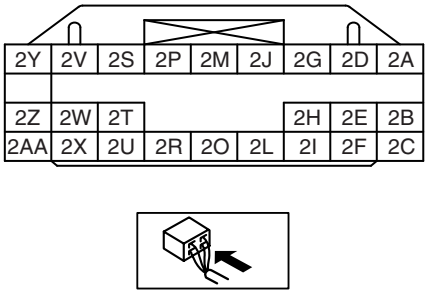

PASSENGER-SIDE SIDE AIR BAG SENSOR NO. 1 WIRING HARNESS-SIDE CONNECTOR

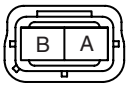

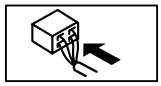

Diagnostic procedure

STEP	INSPECTION		ACTION
1	**INSPECT PASSENGER-SIDE SIDE AIR BAG SENSOR NO. 1 CONNECTOR** **Warning** • **Handling the air bag system components improperly can accidentally deploy the air bag modules and pre-tensioner seat belts, which may seriously injure you. Read the service warnings and cautions before handling the air bag system components.** **(See 08–10–2 SERVICE WARNINGS.)** **(See 08–10–4 SERVICE CAUTIONS.)** • Turn the ignition switch to the LOCK position. • Disconnect the negative battery cable and wait for **1 min or more**. • Remove the passenger-side front seat belt. (See 08–11–1 FRONT SEAT BELT REMOVAL/INSTALLATION.) • Disconnect the passenger-side side air bag sensor No. 1 connector. • Is there any malfunction of the passenger-side side air bag sensor No. 1 connector?	Yes	Replace the air bag wiring harness.
		No	Go to the next step.
2	**INSPECT WIRING HARNESS BETWEEN PASSENGER-SIDE SIDE AIR BAG SENSOR NO. 1 AND SAS CONTROL MODULE** • Turn the ignition switch to the LOCK position. • Disconnect the negative battery cable and wait for **1 min or more**. • Disconnect the driver and passenger-side front seat connectors. • Remove the C-pillar trim. (See 09–17–17 C-PILLAR TRIM REMOVAL/INSTALLATION.) • Disconnect the driver and passenger-side curtain air bag module connectors. • Remove the front console. (See 09–17–13 FRONT CONSOLE REMOVAL/INSTALLATION.) • Disconnect the SAS control module connector. • Disconnect the passenger-side side air bag sensor No. 1 connector. • Connect the negative battery cable. • Inspect the wiring harnesses between SAS control module terminal 2X and passenger-side side air bag sensor No. 1 terminal A, SAS control module terminal 2AA and passenger-side side air bag sensor No. 1 terminal B for the following: — Short to ground — Short to power supply — Open circuit • Is the wiring harness normal?	Yes	Replace the passenger-side side air bag sensor No. 1, then go to the next step. (See 08–10–11 SIDE AIR BAG SENSOR No. 1 REMOVAL/INSTALLATION.)
		No	Replace the air bag wiring harness.
3	**INSPECT SAS CONTROL MODULE** • Turn the ignition switch to the LOCK position. • Disconnect the negative battery cable and wait for **1 min or more**. • Connect the SAS control module connector. • Connect the passenger-side side air bag sensor No. 1 connector. • Are DTCs B104F, U2018 indicated?	Yes	Replace the SAS control module. (See 08–10–10 SAS CONTROL MODULE REMOVAL/INSTALLATION.)
		No	DTC troubleshooting completed.

DTC B2226, B2227

DPE080200000W14

DTC	**B2226**	**Crash zone sensor system internal circuit disabled**
	B2227	**Crash zone sensor system communication error**
DETECTION CONDITION		**Warning** • **Detection conditions are for understanding the DTC outline before performing an inspection. Performing an inspection according to only the detection conditions may cause injury due to an operating error, or damage the system. When performing an inspection, always follow the inspection procedure.** • Malfunction in wiring harness between crash zone sensor and SAS control module • Malfunction in crash zone sensor circuit
POSSIBLE CAUSE		• Open or short circuit in wiring harness between crash zone sensor and SAS control module • Crash zone sensor malfunction • SAS control module malfunction

SAS CONTROL MODULE WIRING HARNESS-SIDE CONNECTOR

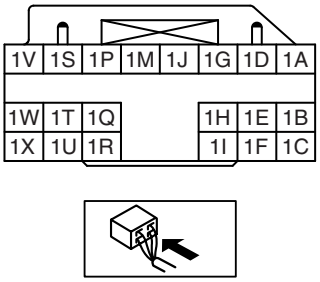

CRASH ZONE SENSOR WIRING HARNESS-SIDE CONNECTOR

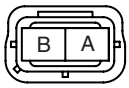

Diagnostic procedure

STEP	INSPECTION		ACTION
1	**INSPECT CRASH ZONE SENSOR CONNECTOR** **Warning** • **Handling the air bag system components improperly can accidentally deploy the air bag modules and pre-tensioner seat belts, which may seriously injure you. Read the service warnings and cautions before handling the air bag system components.** **(See 08–10–2 SERVICE WARNINGS.)** **(See 08–10–4 SERVICE CAUTIONS.)** • Turn the ignition switch to the LOCK position. • Disconnect the negative battery cable and wait for **1 min or more**. • Disconnect the crash zone sensor connector. • Is there any malfunction of the crash zone sensor connector?	Yes	Replace the air bag wiring harness.
		No	Go to the next step.
2	**INSPECT WIRING HARNESS BETWEEN CRASH ZONE SENSOR AND SAS CONTROL MODULE** • Turn the ignition switch to the LOCK position. • Disconnect the negative battery cable and wait for **1 min or more**. • Remove the column cover. (See 09–17–7 COLUMN COVER REMOVAL/INSTALLATION.) • Disconnect the clock spring connector. • Remove the glove compartment. (See 09–17–7 GLOVE COMPARTMENT REMOVAL/INSTALLATION.) • Disconnect the passenger-side air bag module connector. • Disconnect the driver and passenger-side front seat connectors. • Remove the C-pillar trim. (See 09–17–17 C-PILLAR TRIM REMOVAL/INSTALLATION.) • Disconnect the driver and passenger-side curtain air bag module connectors. • Remove the front console. (See 09–17–13 FRONT CONSOLE REMOVAL/INSTALLATION.) • Disconnect the SAS control module connector. • Disconnect the crash zone sensor connector. • Connect the negative battery cable. • Inspect the wiring harnesses between SAS control module terminal 1E and crash zone sensor terminal A, SAS control module terminal 1B and crash zone sensor terminal B for the following: — Short to ground — Short to power supply — Open circuit • Is the wiring harness normal?	Yes	Replace the crash zone sensor, then go to the next step. (See 08–10–10 CRASH ZONE SENSOR REMOVAL/INSTALLATION.)
		No	Replace the air bag wiring harness.
3	**INSPECT SAS CONTROL MODULE** • Turn the ignition switch to the LOCK position. • Disconnect the negative battery cable and wait for **1 min or more**. • Connect the SAS control module connector. • Connect the crash zone sensor connector. • Is DTC B2226, B2227 indicated?	Yes	Replace the SAS control module. (See 08–10–10 SAS CONTROL MODULE REMOVAL/INSTALLATION.)
		No	DTC troubleshooting completed.

DTC B1055, B1996, B1997, B1998, B1999

DPE080200000W17

DTC	B1055	**Passenger-side side air bag module assembly incorrect**
	B1996	**Passenger-side side air bag module circuit short to power supply**
	B1997	**Passenger-side side air bag module circuit short to body ground**
	B1998	**Passenger-side side air bag module circuit resistance high**
	B1999	**Passenger-side side air bag module circuit resistance low**
DETECTION CONDITION		**Warning** • **Detection conditions are for understanding the DTC outline before performing an inspection. Performing an inspection according to only the detection conditions may cause injury due to an operating error, or damage the system. When performing an inspection, always follow the inspection procedure.** • Resistance other than **1.3—4.7 ohms** detected in passenger-side side air bag module circuit • Malfunction in wiring harness between passenger-side side air bag module and SAS control module
POSSIBLE CAUSE		• Open or short circuit in wiring harness between passenger-side side air bag module and SAS control module • Passenger-side side air bag module malfunction • SAS control module malfunction

SAS CONTROL MODULE WIRING HARNESS-SIDE CONNECTOR

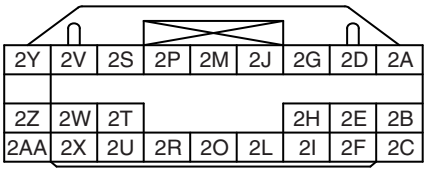

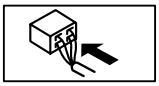

PASSENGER-SIDE SIDE AIR BAG MODULE WIRING HARNESS-SIDE CONNECTOR

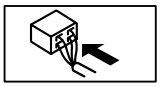

Diagnostic procedure

STEP	INSPECTION		ACTION
1	**INSPECT PASSENGER-SIDE SIDE AIR BAG MODULE** • Using the WDS or equivalent, verify the following PID/DATA monitor. (See 08–02–8 PID/DATA MONITOR TABLE.) — RES_SAB_D • Is the resistance of the passenger-side side air bag module normal? — Resistance: **1.3—4.7 ohms**	Yes	Replace the SAS control module. (See 08–10–10 SAS CONTROL MODULE REMOVAL/ INSTALLATION.)
		No	Go to the next step.
2	**INSPECT PASSENGER-SIDE SIDE AIR BAG MODULE CONNECTOR** **Warning** • **Handling the air bag system components improperly can accidentally deploy the air bag modules and pre-tensioner seat belts, which may seriously injure you. Read the service warnings and cautions before handling the air bag system components.** **(See 08–10–2 SERVICE WARNINGS.)** **(See 08–10–4 SERVICE CAUTIONS.)** • Turn the ignition switch to the LOCK position. • Disconnect the negative battery cable and wait for **1 min or more**. • Remove the passenger-side side air bag module. (See 08–10–7 SIDE AIR BAG MODULE REMOVAL/INSTALLATION.) • Disconnect the passenger-side side air bag module connector. • Is there any malfunction of the passenger-side side air bag module connector?	Yes	Replace the air bag wiring harness.
		No	Go to the next step.
3	**VERIFY WHETHER MALFUNCTION IS IN PASSENGER-SIDE SIDE AIR BAG MODULE OR RELATED WIRING HARNESS** • Connect the leads of the **SST** (Fuel and thermometer checker) or apply **2-ohm** resistance to passenger-side side air bag module connector terminals A and B. • Set the resistance of the **SST** (Fuel and thermometer checker) to the **2-ohm** position. • Connect the negative battery cable. • Turn the ignition switch to the ON position. • Are DTCs B1055, B1996, B1997, B1998 and/or B1999 indicated?	Yes	Go to the next step.
		No	Replace the passenger-side side air bag module. (See 08–10–7 SIDE AIR BAG MODULE REMOVAL/ INSTALLATION.)

STEP	INSPECTION		ACTION
4	**INSPECT WIRING HARNESS BETWEEN PASSENGER-SIDE SIDE AIR BAG MODULE AND SAS CONTROL MODULE** • Turn the ignition switch to the LOCK position. • Disconnect the negative battery cable and wait for **1 min or more**. • Disconnect the driver and passenger-side front seat connectors. • Disconnect the driver and passenger-side curtain air bag module connectors. • Remove the front console. • Inspect the wiring harness between SAS control module terminal 2P and passenger-side side air bag module terminal A, SAS control module terminal 2S and passenger-side side air bag module terminal B for the following: — Short to ground — Short to power supply — Open circuit • Is the wiring harness normal?	Yes	Replace the SAS control module. (See 08–10–10 SAS CONTROL MODULE REMOVAL/ INSTALLATION.)
		No	Replace the air bag wiring harness.

DTC B1056, B2777, B2778, B2779, B2780

DPE080200000W18

DTC	B1056	**Passenger-side curtain air bag module assembly incorrect**
	B2777	**Passenger-side curtain air bag module circuit resistance low**
	B2778	**Passenger-side curtain air bag module circuit resistance high**
	B2779	**Passenger-side curtain air bag module circuit short to body ground**
	B2780	**Passenger-side curtain air bag module circuit short to power supply**
DETECTION CONDITION		**Warning** • **Detection conditions are for understanding the DTC outline before performing an inspection. Performing an inspection according to only the detection conditions may cause injury due to an operating error, or damage the system. When performing an inspection, always follow the inspection procedure.** • Resistance other than **1.3—4.7 ohms** detected in passenger-side curtain air bag module circuit • Malfunction in wiring harness between passenger-side curtain air bag module and SAS control module
POSSIBLE CAUSE		• Open or short circuit in wiring harness between passenger-side curtain air bag module and SAS control module • Passenger-side curtain air bag module malfunction • SAS control module malfunction

SAS CONTROL MODULE WIRING HARNESS-SIDE CONNECTOR

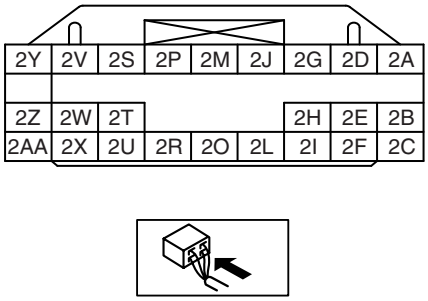

PASSENGER-SIDE CURTAIN AIR BAG MODULE WIRING HARNESS-SIDE CONNECTOR

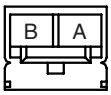

Diagnostic procedure

STEP	INSPECTION		ACTION
1	**INSPECT PASSENGER-SIDE CURTAIN AIR BAG MODULE** • Using the WDS or equivalent, verify the following PID/DATA monitor. (See 08–02–8 PID/DATA MONITOR TABLE.) — RES_CAB_P • Is the resistance of the passenger-side curtain air bag module normal? — Resistance: **1.3—4.7 ohms**	Yes	Replace the SAS control module. (See 08–10–10 SAS CONTROL MODULE REMOVAL/ INSTALLATION.)
		No	Go to the next step.
2	**INSPECT PASSENGER-SIDE CURTAIN AIR BAG MODULE CONNECTOR** **Warning** • **Handling the air bag system components improperly can accidentally deploy the air bag modules and pre-tensioner seat belts, which may seriously injure you. Read the service warnings and cautions before handling the air bag system components.** **(See 08–10–2 SERVICE WARNINGS.)** **(See 08–10–4 SERVICE CAUTIONS.)** • Turn the ignition switch to the LOCK position. • Disconnect the negative battery cable and wait for **1 min or more**. • Remove the C-pillar trim. (See 09–17–17 C-PILLAR TRIM REMOVAL/ INSTALLATION.) • Disconnect the passenger-side curtain air bag module connector. • Is there any malfunction of the passenger-side curtain air bag module connector?	Yes	Replace the air bag wiring harness.
		No	Go to the next step.
3	**VERIFY WHETHER MALFUNCTION IS IN PASSENGER-SIDE CURTAIN AIR BAG MODULE OR RELATED WIRING HARNESS** • Connect the leads of the **SST** (Fuel and thermometer checker) or apply **2-ohm** resistance to passenger-side curtain air bag module connector terminals A and B. • Set the resistance of the **SST** (Fuel and thermometer checker) to the **2-ohm** position. • Connect the negative battery cable. • Turn the ignition switch to the ON position. • Are DTCs B1056, B2777, B2778, B2779 and/or B2780 indicated?	Yes	Replace the air bag wiring harness, then go to the next step.
		No	Replace the passenger-side curtain air bag module. (See 08–10–8 CURTAIN AIR BAG MODULE REMOVAL/ INSTALLATION.)

STEP	INSPECTION		ACTION
4	**INSPECT WIRING HARNESS BETWEEN PASSENGER-SIDE CURTAIN AIR BAG MODULE AND SAS CONTROL MODULE** • Turn the ignition switch to the LOCK position. • Disconnect the negative battery cable and wait for **1 min or more**. • Disconnect the driver and passenger-side front seat connectors. • Disconnect the driver and passenger-side curtain air bag module connectors. • Remove the front console. • Inspect the wiring harness between SAS control module terminal 2Z and passenger-side curtain air bag module terminal A, SAS control module terminal 2W and passenger-side curtain air bag module terminal B for the following: — Short to ground — Short to power supply — Open circuit • Is the wiring harness normal?	Yes	Replace the SAS control module. (See 08–10–10 SAS CONTROL MODULE REMOVAL/ INSTALLATION.)
		No	Replace the air bag wiring harness.

DTC B1058, B2228, B2230, B2232, B2234

DPE080200000W20

DTC	B1058	**Driver-side air bag module assembly incorrect**
	B2228	
	B2230	
	B2232	
	B2234	
DETECTION CONDITION		**Warning** • **Detection conditions are for understanding the DTC outline before performing an inspection. Performing an inspection according to only the detection conditions may cause injury due to an operating error, or damage the system. When performing an inspection, always follow the inspection procedure.** • If a SAS control module of different specification is assembled • If a different configuration setting has been performed • SAS control module internal malfunction
POSSIBLE CAUSE		• Driver-side curtain air bag module assembly incorrect • SAS control module assembly incorrect • SAS control module internal malfunction

Diagnostic procedure

STEP	INSPECTION		ACTION
1	**INSPECT SAS CONTROL MODULE** • Verify that the correct SAS control module is assembled.	Yes	Go to the next step.
		No	Replace the SAS control module. (See 08–10–10 SAS CONTROL MODULE REMOVAL/ INSTALLATION.)
2	**INSPECT SAS CONTROL MODULE** • Using the WDS or equivalent, perform SAS control module configuration. • Is DTC B2477 indicated?	Yes	Replace the SAS control module. (See 08–10–10 SAS CONTROL MODULE REMOVAL/ INSTALLATION.)
		No	Replace the air bag wiring harness.

DTC B1059, B2229, B2231, B2233, B2235

DPE080200000W21

DTC	B1059	Passenger-side air bag module assembly incorrect
	B2229	
	B2231	
	B2233	
	B2235	
DETECTION CONDITION		**Warning** • **Detection conditions are for understanding the DTC outline before performing an inspection. Performing an inspection according to only the detection conditions may cause injury due to an operating error, or damage the system. When performing an inspection, always follow the inspection procedure.** • If a SAS control module of different specification is assembled • If a different configuration setting has been performed • SAS control module internal malfunction
POSSIBLE CAUSE		• Passenger-side air bag module assembly incorrect • SAS control module assembly incorrect • SAS control module internal malfunction

Diagnostic procedure

STEP	INSPECTION		ACTION
1	**INSPECT SAS CONTROL MODULE** • Verify that the correct SAS control module is assembled.	Yes	Go to the next step.
		No	Replace the SAS control module. (See 08–10–10 SAS CONTROL MODULE REMOVAL/ INSTALLATION.)
2	**INSPECT SAS CONTROL MODULE** • Using the WDS or equivalent, perform SAS control module configuration. • Is DTC B2477 indicated?	Yes	Replace the SAS control module. (See 08–10–10 SAS CONTROL MODULE REMOVAL/ INSTALLATION.)
		No	Replace the air bag wiring harness.

DTC B1144, B1145

DPE080200000W32

DTC	B1144	Driver-side side air bag sensor No. 2 system internal circuit disabled
	B1145	Driver-side side air bag sensor No. 2 system communication error
DETECTION CONDITION		**Warning** • **Detection conditions are for understanding the DTC outline before performing an inspection. Performing an inspection according to only the detection conditions may cause injury due to an operating error, or damage the system. When performing an inspection, always follow the inspection procedure.** • Malfunction in wiring harness between driver-side side air bag sensor No. 2 and SAS control module • Malfunction in driver-side side air bag sensor No. 2 circuit
POSSIBLE CAUSE		• Open or short circuit in wiring harness between driver-side side air bag sensor No. 2 and SAS control module • Driver-side side air bag sensor No. 2 malfunction (Including incorrect assembly) • SAS control module malfunction

SAS CONTROL MODULE WIRING HARNESS-SIDE CONNECTOR

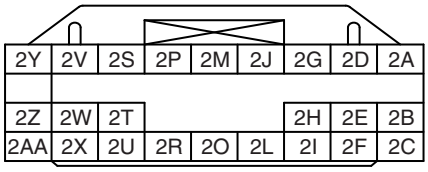

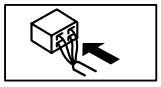

DRIVER-SIDE SIDE AIR BAG SENSOR NO. 2 WIRING HARNESS-SIDE CONNECTOR

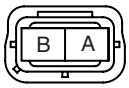

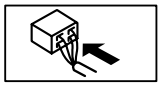

Diagnostic procedure

STEP	INSPECTION		ACTION
1	**INSPECT DRIVER-SIDE SIDE AIR BAG SENSOR NO. 2 CONNECTOR** **Warning** • **Handling the air bag system components improperly can accidentally deploy the air bag modules and pre-tensioner seat belts, which may seriously injure you. Read the service warnings and cautions before handling the air bag system components.** **(See 08–10–2 SERVICE WARNINGS.)** **(See 08–10–4 SERVICE CAUTIONS.)** • Turn the ignition switch to the LOCK position. • Disconnect the negative battery cable and wait for **1 min or more**. • Remove the trunk side trim. (See 09–17–19 TRUNK SIDE TRIM REMOVAL/INSTALLATION.) • Disconnect the driver-side side air bag sensor No. 2 connector. • Is there any malfunction of the driver-side side air bag sensor No. 2 connector?	Yes	Replace the air bag wiring harness.
		No	Go to the next step.
2	**INSPECT WIRING HARNESS BETWEEN DRIVER-SIDE SIDE AIR BAG SENSOR NO. 2 AND SAS CONTROL MODULE** • Turn the ignition switch to the LOCK position. • Disconnect the negative battery cable and wait for **1 min or more**. • Disconnect the driver and passenger-side front seat connectors. • Remove the C-pillar trim. (See 09–17–17 C-PILLAR TRIM REMOVAL/INSTALLATION.) • Disconnect the driver and passenger-side curtain air bag module connectors. • Remove the front console. (See 09–17–13 FRONT CONSOLE REMOVAL/INSTALLATION.) • Disconnect the SAS control module connector. • Disconnect the driver-side side air bag sensor No. 2 connector. • Connect the negative battery cable. • Inspect the wiring harnesses between SAS control module terminal 2I and driver-side side air bag sensor No. 2 terminal A, SAS control module terminal 2L and driver-side side air bag sensor No. 2 terminal B for the following: — Short to ground — Short to power supply — Open circuit • Is the wiring harness normal?	Yes	Replace the driver-side side air bag sensor No. 2, then go to the next step. (See 08–10–12 SIDE AIR BAG SENSOR No. 2 REMOVAL/INSTALLATION.)
		No	Replace the air bag wiring harness.
3	**INSPECT SAS CONTROL MODULE** • Turn the ignition switch to the LOCK position. • Disconnect the negative battery cable and wait for **1 min or more**. • Connect the SAS control module connector. • Connect the driver-side side air bag sensor No. 2 connector. • Are DTCs B1144, B1145 indicated?	Yes	Replace the SAS control module. (See 08–10–10 SAS CONTROL MODULE REMOVAL/INSTALLATION.)
		No	DTC troubleshooting completed.

DTC B1146, B1147

DPE080200000W33

DTC	**B1146**	**Passenger-side side air bag sensor No. 2 system internal circuit disabled**
	B1147	**Passenger-side side air bag sensor No. 2 system communication error**
DETECTION CONDITION		**Warning** • **Detection conditions are for understanding the DTC outline before performing an inspection. Performing an inspection according to only the detection conditions may cause injury due to an operating error, or damage the system. When performing an inspection, always follow the inspection procedure.** • Malfunction in wiring harness between passenger-side side air bag sensor No. 2 and SAS control module • Malfunction in passenger-side side air bag sensor No. 2 circuit
POSSIBLE CAUSE		• Open or short circuit in wiring harness between passenger-side side air bag sensor No. 2 and SAS control module • Passenger-side side air bag sensor No. 2 malfunction (Including incorrect assembly) • SAS control module malfunction

SAS CONTROL MODULE WIRING HARNESS-SIDE CONNECTOR

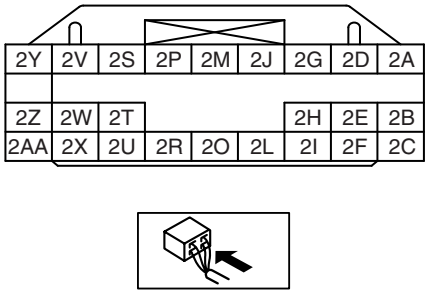

PASSENGER-SIDE SIDE AIR BAG SENSOR NO. 2 WIRING HARNESS-SIDE CONNECTOR

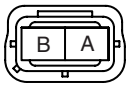

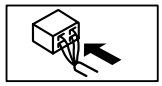

Diagnostic procedure

STEP	INSPECTION		ACTION
1	**INSPECT PASSENGER-SIDE SIDE AIR BAG SENSOR NO. 2 CONNECTOR** **Warning** • **Handling the air bag system components improperly can accidentally deploy the air bag modules and pre-tensioner seat belts, which may seriously injure you. Read the service warnings and cautions before handling the air bag system components.** **(See 08–10–2 SERVICE WARNINGS.)** **(See 08–10–4 SERVICE CAUTIONS.)** • Turn the ignition switch to the LOCK position. • Disconnect the negative battery cable and wait for **1 min or more**. • Remove the passenger-side front seat belt. (See 08–11–1 FRONT SEAT BELT REMOVAL/INSTALLATION.) • Disconnect the passenger-side side air bag sensor No. 2 connector. • Is there any malfunction of the passenger-side side air bag sensor No. 2 connector?	Yes	Replace the air bag wiring harness.
		No	Go to the next step.
2	**INSPECT WIRING HARNESS BETWEEN PASSENGER-SIDE SIDE AIR BAG SENSOR NO. 2 AND SAS CONTROL MODULE** • Turn the ignition switch to the LOCK position. • Disconnect the negative battery cable and wait for **1 min or more**. • Disconnect the driver and passenger-side front seat connectors. • Remove the C-pillar trim. (See 09–17–17 C-PILLAR TRIM REMOVAL/INSTALLATION.) • Disconnect the driver and passenger-side curtain air bag module connectors. • Remove the front console. (See 09–17–13 FRONT CONSOLE REMOVAL/INSTALLATION.) • Disconnect the SAS control module connector. • Disconnect the passenger-side side air bag sensor No. 2 connector. • Connect the negative battery cable. • Inspect the wiring harnesses between SAS control module terminal 2U and passenger-side side air bag sensor No. 2 terminal A, SAS control module terminal 2R and passenger-side side air bag sensor No. 2 terminal B for the following: — Short to ground — Short to power supply — Open circuit • Is the wiring harness normal?	Yes	Replace the passenger-side side air bag sensor No. 2, then go to the next step. (See 08–10–12 SIDE AIR BAG SENSOR No. 2 REMOVAL/INSTALLATION.)
		No	Replace the air bag wiring harness.
3	**INSPECT SAS CONTROL MODULE** • Turn the ignition switch to the LOCK position. • Disconnect the negative battery cable and wait for **1 min or more**. • Connect the SAS control module connector. • Connect the passenger-side side air bag sensor No. 2 connector. • Are DTCs B1146, B1147 indicated.	Yes	Replace the SAS control module. (See 08–10–10 SAS CONTROL MODULE REMOVAL/INSTALLATION.)
		No	DTC troubleshooting completed.

DTC B1318

DPE080200000W24

DTC	B1318	The power supply voltage decreases (less than 9 V)
DETECTION CONDITION		**Warning** • **Detection conditions are for understanding the DTC outline before performing an inspection. Performing an inspection with only detection conditions may cause injury due to an operating error, or damage the system. When performing an inspection, always follow the inspection procedure.** • When the SAS control module power supply voltage is not **within 9—16 V**.
POSSIBLE CAUSE		• Open or short circuit in wiring harness between battery and SAS control module • SAS 10 A fuse malfunction • Battery malfunction • SAS control module malfunction

SAS CONTROL MODULE WIRING HARNESS-SIDE CONNECTOR

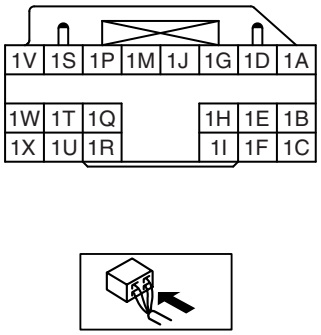

FUSE BLOCK

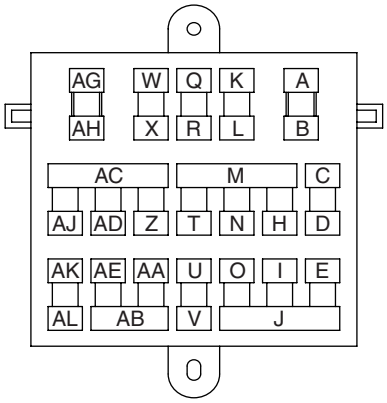

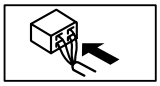

Diagnostic procedure

Step	Inspection		Action
1	**INSPECT FUSE** • Remove the SAS 10 A fuse. • Is the fuse normal?	Yes	Go to the next step.
		No	Replace the fuse.
2	**INSPECT BATTERY** • Measure the battery positive voltage. • Is the voltage **9 V—16 V**?	Yes	Go to the next step.
		No	The battery has a malfunction. Inspect the charge/discharge system.
3	**INSPECT WIRING HARNESS BETWEEN BATTERY AND PJB** • Turn the ignition switch to the ON position. • Measure the fuse block terminal O voltage. • Is the voltage **9 V—16 V**?	Yes	Install the fuse, then go to the next step.
		No	Repair the wiring harness between the fuse block and ignition switch.
4	**INSPECT PJB** **Warning** • **Handling the air bag system components improperly can accidentally deploy the air bag modules and pre-tensioner seat belts, which may seriously injure you. Read the service warnings before handling the air bag system components. (See 08–10–2 SERVICE WARNINGS.) (See 08–10–4 SERVICE CAUTIONS.)** • Turn the ignition switch to the LOCK position. • Disconnect the negative battery cable and wait for **1 min or more**. • Remove the column cover. (See 09–17–7 COLUMN COVER REMOVAL/INSTALLATION.) • Disconnect the clock spring connector. • Remove the glove compartment. (See 09–17–7 GLOVE COMPARTMENT REMOVAL/INSTALLATION.) • Disconnect the passenger-side air bag module connector. • Remove the C-pillar trim. (See 09–17–17 C-PILLAR TRIM REMOVAL/INSTALLATION.) • Disconnect the driver and passenger-side curtain air bag module connector. • Disconnect the front seat connector. • Remove the front console. (See 09–17–13 FRONT CONSOLE REMOVAL/INSTALLATION.) • Disconnect the SAS control module connector. • Turn the ignition switch to the ON position. • Measure the SAS control module terminal 1W voltage. • Is the voltage **9 V—16 V**?	Yes	Replace the SAS control module. (See 08–10–10 SAS CONTROL MODULE REMOVAL/INSTALLATION.)
		No	Repair the wiring harness between the fuse block and SAS control module.

DTC B1342

DPE080200000W25

DTC B1342	SAS control module
DETECTION CONDITION	**Warning** • **Detection conditions are for understanding the DTC outline before performing an inspection. Performing an inspection with only detection conditions may cause injury due to an operating error, or damage the system. When performing an inspection, always follow the inspection procedure.** • Malfunction in the SAS control module internal circuit
POSSIBLE CAUSE	• SAS control module malfunction

Diagnostic procedure

ACTION
• Replace the SAS control module. (See 08–10–10 SAS CONTROL MODULE REMOVAL/INSTALLATION.)

DTC B1869

DPE080200000W31

DTC	**B1869**	• **Air bag system warning light circuit open (the air bag system warning light is continuously illuminated.)** • **Air bag system warning light circuit short to body ground (the air bag system warning light is never illuminated.)**
DETECTION CONDITION		**Warning** • **Detection conditions are for understanding the DTC outline before performing an inspection. Performing an inspection according to only the detection conditions may cause injury due to an operating error, or damage the system. When performing an inspection, always follow the inspection procedure.** • Malfunction in the air bag system warning light circuit
POSSIBLE CAUSE		• Instrument cluster malfunction • Malfunction of the connectors between the instrument cluster and SAS control module • Open or short circuit in the wiring harness between the battery and the instrument cluster • Open or short circuit in the wiring harness between the instrument cluster and SAS control module • SAS control module malfunction

INSTRUMENT CLUSTER HARNESS-SIDE CONNECTOR

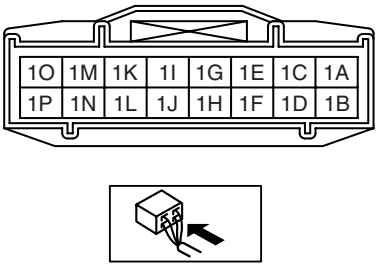

SAS CONTROL MODULE WIRING HARNESS-SIDE CONNECTOR

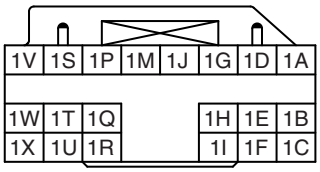

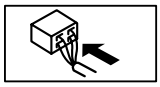

Diagnostic procedure

STEP	INSPECTION		ACTION
1	**INSPECT FOR CONTINUITY BETWEEN BATTERY FUSE AND INSTRUMENT CLUSTER** • Turn the ignition switch to the ON position. • Measure the voltage at instrument cluster connector terminal 1G. • Is the voltage **9 V or more**?	Yes	Go to the next step.
		No	Repair the related wiring harness.
2	**INSPECT WIRING HARNESS BETWEEN INSTRUMENT CLUSTER AND SAS CONTROL MODULE** **Warning** • **Handling the air bag system components improperly can accidentally deploy the air bag modules and pre-tensioner seat belts, which may seriously injure you. Read the service warnings and cautions before handling the air bag system components.** **(See 08–10–2 SERVICE WARNINGS.)** **(See08–10–4 SERVICE CAUTIONS.)** • Turn the ignition switch to the LOCK position. • Disconnect the negative battery cable and wait for **1 min or more**. • Remove the column cover. (See 09–17–7 COLUMN COVER REMOVAL/INSTALLATION.) • Disconnect the clock spring connector. • Remove the glove compartment. (See 09–17–7 GLOVE COMPARTMENT REMOVAL/INSTALLATION.) • Disconnect the passenger-side air bag module connector. • Remove the C-pillar trim. (See 09–17–17 C-PILLAR TRIM REMOVAL/INSTALLATION.) • Disconnect the driver and passenger-side curtain air bag module connectors. • Disconnect the driver and passenger-side side air bag module connectors. • Remove the B-pillar lower trim. (See 09–17–16 B-PILLAR LOWER TRIM REMOVAL/INSTALLATION.) • Disconnect the driver and passenger-side pre-tensioner seat belt connectors. • Remove the front console. (See 09–17–13 FRONT CONSOLE REMOVAL/INSTALLATION.) • Disconnect the SAS control module connector. • Disconnect the instrument cluster connector. • Inspect the wiring harness between SAS control module terminal 1R and instrument cluster terminal 1J for the following: — Short to ground — Short to power supply — Open circuit • Is the wiring harness normal?	Yes	Go to the next step.
		No	Replace the air bag wiring harness.
4	**INSPECT AIR BAG SYSTEM WARNING LIGHT** • Connect the instrument cluster connector. • Turn the ignition switch to the ON position. • Does the air bag system warning light illuminate?	Yes	Go to the next step.
		No	Replace the instrument cluster. (See 09–22–1 INSTRUMENT CLUSTER REMOVAL/INSTALLATION)

STEP	INSPECTION		ACTION
5	**INSPECT AIR BAG SYSTEM WARNING LIGHT** • Ground instrument cluster connector terminal 1J to the body using a jumper wire. • Does the air bag system warning light go out?	Yes	**[Present malfunction diagnosis]** • Replace the SAS control module. (See 08–10–10 SAS CONTROL MODULE REMOVAL/ INSTALLATION.) **[Past malfunction diagnosis]** • DTC troubleshooting completed.
		No	Replace the instrument cluster. (See 09–22–1 INSTRUMENT CLUSTER REMOVAL/ INSTALLATION)

DTC B1871

DPE080200000W30

DTC B1871	Passenger air bag deactivation (PAD) switch system circuit disabled
DETECTION CONDITION	**Warning** • **Detection conditions are for understanding DTC outline before performing inspection. Performing inspection with only detection conditions may cause injury due to operating error or damage the system. When performing inspection, always follow inspection procedure.** • Malfunction in wiring harness between PAD switch and SAS control module • Malfunction in PAD switch circuit
POSSIBLE CAUSE	• Open or short circuit in wiring harness between PAD switch and SAS control module • PAD switch circuit malfunction • SAS control module malfunction • PAD switch assembly incorrect

SAS CONTROL MODULE WIRING HARNESS-SIDE CONNECTOR

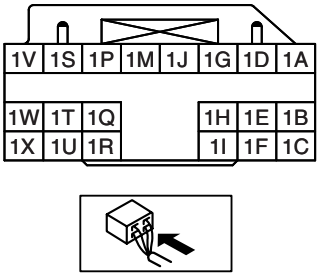

PASSENGER AIR BAG DEACTIVATION (PAD) SWITCH WIRING HARNESS-SIDE CONNECTOR

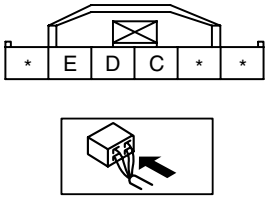

Diagnostic procedure

STEP	INSPECTION		ACTION
1	**INSPECT PAD SWITCH** • Using the WDS or equivalent, verify the following PID/DATA monitor. (See 08–02–8 PID/DATA MONITOR TABLE.) — I_PAD_SW • Is the PAD switch normal?	Yes	Go to the next step.
		No	Replace the PAD switch (See 08–10–16 PASSENGER AIR BAG DEACTIVATION (PAD) SWITCH REMOVAL/INSTALLATION.)
2	**INSPECT WIRING HARNESS BETWEEN PAD SWITCH AND SAS CONTROL MODULE** • Turn the ignition switch to the LOCK position. • Disconnect the negative battery cable and wait for **1 min or more**. • Disconnect the PAD switch connectors. • Remove the front console. • Inspect the wiring harness between SAS control module terminal 1Q and PAD switch terminal D, SAS control module terminal 1H and PAD switch terminal C for the following: — Short to ground — Open circuit • Is the wiring harness normal?	Yes	Go to the next step.
		No	Replace the air bag wiring harness.
3	**INSPECT PAD SWITCH** • Disconnect the PAD switch connectors. • Is there continuity between terminal E of PAD switch connector and ground?	Yes	Replace the SAS control module. (See 08–10–10 SAS CONTROL MODULE REMOVAL/INSTALLATION.)
		No	Replace the air bag wiring harness.

DTC B1877, B1878, B1879, B1885

DPE080200000W16

DTC	**B1877**	**Driver-side pre-tensioner seat belt circuit resistance high**
	B1878	**Driver-side pre-tensioner seat belt circuit short to power supply**
	B1879	**Driver-side pre-tensioner seat belt circuit short to body ground**
	B1885	**Driver-side pre-tensioner seat belt circuit resistance low**
DETECTION CONDITION	**Warning** • **Detection conditions are for understanding the DTC outline before performing an inspection. Performing an inspection according to only the detection conditions may cause injury due to an operating error, or damage the system. When performing an inspection, always follow the inspection procedure.** • Resistance other than **1.3—4.7 ohms** detected in driver-side pre-tensioner seat belt circuit • Malfunction in the wiring harness between driver-side pre-tensioner seat belt and SAS control module	
POSSIBLE CAUSE	• Open or short circuit in wiring harness between driver-side pre-tensioner seat belt and SAS control module • Driver-side pre-tensioner seat belt malfunction • SAS control module malfunction	

SAS CONTROL MODULE WIRING HARNESS-SIDE CONNECTOR

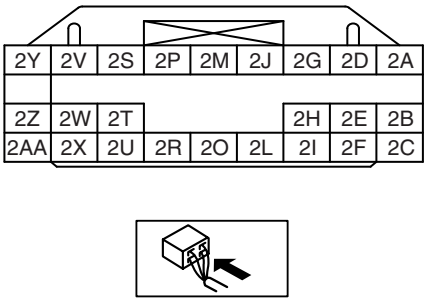

DRIVER-SIDE PRE-TENSIONER SEAT BELT WIRING HARNESS-SIDE CONNECTOR

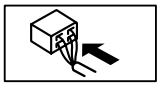

08

Diagnostic procedure

STEP	INSPECTION		ACTION
1	**INSPECT DRIVER-SIDE PRE-TENSIONER SEAT BELT** • Using the WDS or equivalent, verify the following PID/DATA monitor. (See 08–02–8 PID/DATA MONITOR TABLE.) — RES_PT_D • Is the resistance of the driver-side pre-tensioner seat belt normal? — Resistance: **1.3—4.7 ohms**	Yes	Replace the SAS control module. (See 08–10–10 SAS CONTROL MODULE REMOVAL/ INSTALLATION.)
		No	Go to the next step.
2	**INSPECT DRIVER-SIDE PRE-TENSIONER SEAT BELT CONNECTOR** **Warning** • **Handling the air bag system components improperly can accidentally deploy the air bag modules and pre-tensioner seat belts, which may seriously injure you. Read the service warnings and cautions before handling the air bag system components.** **(See 08–10–2 SERVICE WARNINGS.)** **(See 08–10–4 SERVICE CAUTIONS.)** • Turn the ignition switch to the LOCK position. • Disconnect the negative battery cable and wait for **1 min or more**. • Remove the B-pillar lower trim. (See 09–17–16 B-PILLAR LOWER TRIM REMOVAL/INSTALLATION.) • Disconnect the driver-side pre-tensioner seat belt connector. • Is there any malfunction of the driver-side pre-tensioner seat belt connector?	Yes	Replace the air bag wiring harness.
		No	Go to the next step.
3	**VERIFY WHETHER MALFUNCTION IS IN DRIVER-SIDE PRE-TENSIONER SEAT BELT OR RELATED WIRING HARNESS** • Connect the leads of the **SST** (Fuel and thermometer checker) or apply **2-ohm** resistance to driver-side pre-tensioner seat belt connector terminals A and B. • Set the resistance of the **SST** (Fuel and thermometer checker) to the **2-ohm** position. • Connect the negative battery cable. • Turn the ignition switch to the ON position. • Are DTCs B1877, B1878, B1879, and/or B1885 indicated?	Yes	Replace the air bag wiring harness, then go to the next step.
		No	Replace the driver-side pre-tensioner seat belt. (See 08–11–1 FRONT SEAT BELT REMOVAL/ INSTALLATION.)

STEP	INSPECTION		ACTION
4	**INSPECT WIRING HARNESS BETWEEN DRIVER-SIDE PRE-TENSIONER SEAT BELT MODULE AND SAS CONTROL MODULE** • Turn the ignition switch to the LOCK position. • Disconnect the negative battery cable and wait for **1 min or more**. • Disconnect the driver and passenger-side front seat connectors. • Disconnect the driver and passenger-side curtain air bag module connectors. • Remove the front console. • Inspect the wiring harness between SAS control module terminal 2D and driver-side pre-tensioner seat belt module terminal A, SAS control module terminal 2A and driver-side pre-tensioner seat belt module terminal B for the following: — Short to ground — Short to power supply — Open circuit • Is the wiring harness normal?	Yes	Replace the SAS control module. (See 08–10–10 SAS CONTROL MODULE REMOVAL/ INSTALLATION.)
		No	Replace the air bag wiring harness.

DTC B1881, B1882, B1883, B1886

DPE080200000W11

DTC	B1881	**Passenger-side pre-tensioner seat belt circuit resistance high**
	B1882	**Passenger-side pre-tensioner seat belt circuit short to power supply**
	B1883	**Passenger-side pre-tensioner seat belt circuit short to body ground**
	B1886	**Passenger-side pre-tensioner seat belt circuit resistance low**
DETECTION CONDITION		**Warning** • **Detection conditions are for understanding the DTC outline before performing an inspection. Performing an inspection according to only the detection conditions may cause injury due to an operating error, or damage the system. When performing an inspection, always follow the inspection procedure.** • Resistance other than **1.3—4.7 ohms** detected in passenger-side pre-tensioner seat belt circuit • Malfunction in wiring harness between passenger-side pre-tensioner seat belt and SAS control module
POSSIBLE CAUSE		• Open or short circuit in wiring harness between passenger-side pre-tensioner seat belt and SAS control module • Passenger-side pre-tensioner seat belt malfunction • SAS control module malfunction

PASSENGER-SIDE PRE-TENSIONER SEAT BELT
WIRING HARNESS-SIDE CONNECTOR

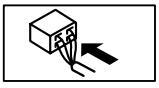

Diagnostic procedure

STEP	INSPECTION		ACTION
1	**INSPECT PASSENGER-SIDE PRE-TENSIONER SEAT BELT** • Using the WDS or equivalent, verify the following PID/DATA monitor. (See 08–02–8 PID/DATA MONITOR TABLE.) — RES_PT_P • Is the resistance of the passenger-side pre-tensioner seat belt normal? — Resistance: **1.3—4.7 ohms**	Yes	Replace the SAS control module. (See 08–10–10 SAS CONTROL MODULE REMOVAL/INSTALLATION.)
		No	Go to the next step.
2	**INSPECT PASSENGER-SIDE PRE-TENSIONER SEAT BELT CONNECTOR** **Warning** • **Handling the air bag system components improperly can accidentally deploy the air bag modules and pre-tensioner seat belts, which may seriously injure you. Read the service warnings and cautions before handling the air bag system components.** **(See 08–10–2 SERVICE WARNINGS.)** **(See 08–10–4 SERVICE CAUTIONS.)** • Turn the ignition switch to the LOCK position. • Disconnect the negative battery cable and wait for **1 min or more**. • Remove the B-pillar lower trim. (See 09–17–16 B-PILLAR LOWER TRIM REMOVAL/INSTALLATION.) • Disconnect the passenger-side pre-tensioner seat belt connector. • Is there any malfunction of the passenger-side pre-tensioner seat belt connector?	Yes	Replace the air bag wiring harness.
		No	Go to the next step.
3	**VERIFY WHETHER MALFUNCTION IS IN PASSENGER-SIDE PRE-TENSIONER SEAT BELT OR RELATED WIRING HARNESS** • Connect the leads of the **SST** (Fuel and thermometer checker) or apply **2-ohm** resistance to passenger-side pre-tensioner seat belt connector terminals A and B. • Set the resistance of the **SST** (Fuel and thermometer checker) to the **2-ohm** position. • Connect the negative battery cable. • Turn the ignition switch to the ON position. • Are DTCs B1881, B1882, B1883, and/or B1886 indicated?	Yes	Replace the air bag wiring harness, then go to the next step.
		No	Replace the passenger-side pre-tensioner seat belt. (See 08–11–1 FRONT SEAT BELT REMOVAL/INSTALLATION.)

STEP	INSPECTION		ACTION
4	**INSPECT WIRING HARNESS BETWEEN PASSENGER-SIDE PRE-TENSIONER SEAT BELT AND SAS CONTROL MODULE** • Turn the ignition switch to the LOCK position. • Disconnect the negative battery cable and wait for **1 min or more**. • Disconnect the driver and passenger-side front seat connectors. • Disconnect the driver and passenger-side curtain air bag module connectors. • Remove the front console. • Inspect the wiring harness between SAS control module terminal 2Y and passenger-side pre-tensioner seat belt terminal A, SAS control module terminal 2V and passenger-side pre-tensioner seat belt terminal B for the following: — Short to ground — Short to power supply — Open circuit • Is the wiring harness normal?	Yes	Replace the SAS control module. (See 08–10–10 SAS CONTROL MODULE REMOVAL/ INSTALLATION.)
		No	Replace the air bag wiring harness.

DTC B1884

DPE080200000W26

DTC	B1884	Passenger air bag deactivation (PAD) indicator circuit open or short to body ground
DETECTION CONDITION		**Warning** • **Detection conditions are for understanding the DTC outline before performing an inspection. Performing an inspection according to only the detection conditions may cause injury due to an operating error, or damage the system. When performing an inspection, always follow the inspection procedure.** • Malfunction in PAD indicator circuit
POSSIBLE CAUSE		• Open or short circuit in wiring harness between PAD indicator and SAS control module • Open circuit in wiring harness between battery and PAD indicator • PAD indicator malfunction • SAS control module malfunction

SAS CONTROL MODULE WIRING HARNESS-SIDE CONNECTOR

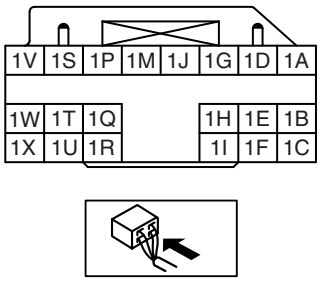

PAD INDICATOR WIRING HARNESS-SIDE CONNECTOR

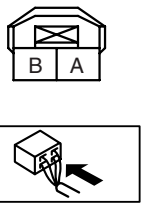

08

Diagnostic procedure

STEP	INSPECTION		ACTION
1	**INSPECT OPERATION OF PAD INDICATOR** • Turn the ignition switch to the ON position. • Does the PAD indicator illuminate?	Yes	Go to the next step.
		No	Go to Step 6.
2	**INSPECT FUSE** • Remove the SAS 10 A fuse. • Is the fuse normal?	Yes	Install the fuse, then go to the next step.
		No	Replace the fuse.
3	**INSPECT BATTERY** • Measure the battery positive voltage. • Is the voltage **9 V—16 V**?	Yes	Go to the next step.
		No	Battery is malfunctioning Inspect the charge/discharge system.
4	**INSPECT WIRING HARNESS BETWEEN BATTERY AND PAD INDICATOR** • Turn the ignition switch to the ON position. • Measure the PAD indicator terminal A voltage. • Is the voltage **9 V or more**?	Yes	Go to the next step.
		No	Repair the wiring harness between the battery and PAD indicator.
5	**INSPECT PAD INDICATOR** • Ground PAD indicator connector terminal B using a jumper wire. • Turn the ignition switch to the ON position. • Does the PAD indicator illuminate?	Yes	Go to the next step.
		No	Replace the air bag wiring harness.
6	**INSPECT WIRING HARNESS BETWEEN PAD INDICATOR AND SAS CONTROL MODULE** **Warning** • **Handling the air bag system components improperly can accidentally deploy the air bag modules and pre-tensioner seat belts, which may seriously injure you. Read the service warnings before handling the air bag system components.** **(See 08–10–2 SERVICE WARNINGS.)** **(See 08–10–4 SERVICE CAUTIONS.)** • Turn the ignition switch to the LOCK position. • Disconnect the negative battery cable and wait for **1 min or more**. • Remove the column cover. (See 09–17–7 COLUMN COVER REMOVAL/INSTALLATION.) • Disconnect the clock spring connector. • Remove the glove comportment. (See 09–17–7 GLOVE COMPARTMENT REMOVAL/INSTALLATION.) • Disconnect the passenger-side air bag module connector. • Remove the C-pillar trim. (See 09–17–17 C-PILLAR TRIM REMOVAL/INSTALLATION.) • Disconnect the driver and passenger-side curtain air bag module connector. • Disconnect the front seat connector. • Remove the front console. (See 09–17–13 FRONT CONSOLE REMOVAL/INSTALLATION.) • Disconnect the SAS control module connector. • Inspect the wiring harness between PAD indicator terminal B and SAS control module terminal 1U for the following: — Short to ground — Short to power supply — Open circuit • Is the wiring harness normal?	Yes	Go to the next step.
		No	Replace the air bag wiring harness.
6	**INSPECT PAD INDICATOR BULB** • Inspect the PAD indicator bulb. • Is the wiring harness normal?	Yes	Replace the SAS control module. (See 08–10–10 SAS CONTROL MODULE REMOVAL/INSTALLATION .)
		No	Replace the PAD indicator bulb. (See 08–10–17 PASSENGER AIR BAG DEACTIVATION (PAD) INDICATOR REMOVAL/INSTALLATION.)

DTC B1916, B1932, B1934, B1936

DPE080200000W19

DTC	**B1916**	**Driver-side air bag module circuit short to power supply**
	B1932	**Driver-side air bag module circuit resistance high**
	B1934	**Driver-side air bag module circuit resistance low**
	B1936	**Driver-side air bag module circuit short to body ground**
DETECTION CONDITION		**Warning** • **Detection conditions are for understanding the DTC outline before performing an inspection. Performing an inspection according to only the detection conditions may cause injury due to an operating error, or damage the system. When performing an inspection, always follow the inspection procedure.** • Resistance other than **1.5—4.7 ohms** detected in driver-side air bag module circuit • Malfunction in wiring harness between driver-side air bag module and SAS control module
POSSIBLE CAUSE		• Open or short circuit in wiring harness between clock spring and SAS control module • Clock spring malfunction • Driver-side air bag module malfunction • SAS control module malfunction

SAS CONTROL MODULE WIRING HARNESS-SIDE CONNECTOR

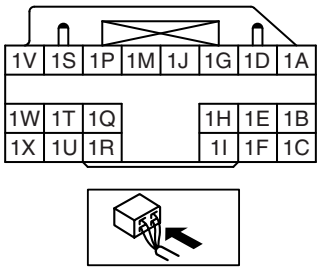

CLOCK SPRING WIRING HARNESS-SIDE CONNECTOR

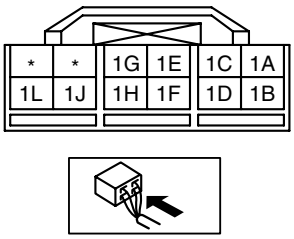

DRIVER-SIDE AIR BAG MODULE WIRING HARNESS-SIDE CONNECTOR (CLOCK SPRING)

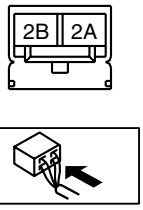

Diagnostic procedure

STEP	INSPECTION		ACTION
1	**INSPECT DRIVER-SIDE AIR BAG MODULE** • Using the WDS or equivalent, verify the following PID/DATA monitor. (See 08–02–8 PID/DATA MONITOR TABLE.) — RES_AB_D • Is the resistance of the driver-side air bag module normal? — Resistance: **1.5—4.7 ohms**	Yes	Replace the SAS control module. (See 08–10–10 SAS CONTROL MODULE REMOVAL/ INSTALLATION.)
		No	Go to the next step.
2	**INSPECT DRIVER-SIDE AIR BAG MODULE CONNECTOR (CLOCK SPRING)** **Warning** • **Handling the air bag system components improperly can accidentally deploy the air bag modules and pre-tensioner seat belts, which may seriously injure you. Read the service warnings and cautions before handling the air bag system components.** **(See 08–10–2 SERVICE WARNINGS.)** **(See 08–10–4 SERVICE CAUTIONS.)** • Turn the ignition switch to the LOCK position. • Disconnect the negative battery cable and wait for **1 min or more**. • Remove the driver-side air bag module. • Is there any malfunction of the driver-side air bag module connector?	Yes	Replace the air bag wiring harness and /or clock spring.
		No	Go to the next step.
3	**VERIFY WHETHER MALFUNCTION IS IN DRIVER-SIDE AIR BAG MODULE OR RELATED WIRING HARNESS** • Connect the leads of the **SST** (Fuel and thermometer checker) or apply **2-ohm** resistance to driver-side air bag module connector terminals 2A and 2B. • Set the resistance of the **SST** (Fuel and thermometer checker) to the **2-ohm** position. • Connect the negative battery cable. • Turn the ignition switch to the ON position. • Are DTCs B1916, B1932, B1934 and/or B1936?	Yes	Go to the next step.
		No	Replace the driver-side air bag module. (See 08–10–5 DRIVER-SIDE AIR BAG MODULE REMOVAL/INSTALLATION.)
4	**INSPECT CLOCK SPRING** • Inspect the clock spring. (See 08–10–15 CLOCK SPRING INSPECTION.) • Is the clock spring normal?	Yes	Go to the next step.
		No	Replace the clock spring. (See 08–10–13 CLOCK SPRING REMOVAL/ INSTALLATION.)

STEP	INSPECTION		ACTION
5	**INSPECT WIRING HARNESS BETWEEN CLOCK SPRING AND SAS CONTROL MODULE** • Turn the ignition switch to the LOCK position. • Disconnect the negative battery cable and wait for **1 min or more**. • Remove the column cover. (See 09–17–7 COLUMN COVER REMOVAL/INSTALLATION.) • Disconnect the clock spring connector. • Remove the glove compartment. (See 09–17–7 GLOVE COMPARTMENT REMOVAL/INSTALLATION.) • Disconnect the passenger-side air bag module connector. • Disconnect the driver and passenger-side front seat connectors. • Remove the C-pillar trim. (See 09–17–17 C-PILLAR TRIM REMOVAL/INSTALLATION.) • Disconnect the driver and passenger-side curtain air bag module connectors. • Remove the front console. (See 09–17–13 FRONT CONSOLE REMOVAL/INSTALLATION.) • Inspect the wiring harness between SAS control module terminal 1A and clock spring terminal 1L, SAS control module terminal 1D and clock spring terminal 1J for the following: — Short to ground — Short to power supply — Open circuit • Is the wiring harness normal?	Yes	Replace the SAS control module. (See 08–10–10 SAS CONTROL MODULE REMOVAL/INSTALLATION.)
		No	Replace the air bag wiring harness.

DTC B1925, B1933, B1935, B1938

DPE080200000W10

DTC	B1925	**Passenger-side air bag module circuit short to power supply**
	B1933	**Passenger-side air bag module circuit resistance high**
	B1935	**Passenger-side air bag module circuit resistance low**
	B1938	**Passenger-side air bag module circuit short to body ground**
DETECTION CONDITION		**Warning** • **Detection conditions are for understanding the DTC outline before performing an inspection. Performing an inspection according to only the detection conditions may cause injury due to an operating error, or damage the system. When performing an inspection, always follow the inspection procedure.** • Resistance other than **1.3—4.7 ohms** detected in passenger-side air bag module circuit • Malfunction in wiring harness between passenger-side air bag module and SAS control module
POSSIBLE CAUSE		• Open or short circuit in wiring harness between passenger-side air bag module and SAS control module • Passenger-side air bag module malfunction • SAS control module malfunction

DTC	B1925	Passenger-side air bag module circuit short to power supply
	B1933	Passenger-side air bag module circuit resistance high
	B1935	Passenger-side air bag module circuit resistance low
	B1938	Passenger-side air bag module circuit short to body ground

SAS CONTROL MODULE WIRING HARNESS-SIDE CONNECTOR

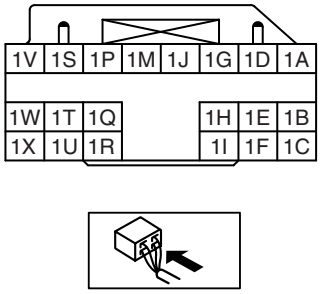

PASSENGER-SIDE AIR BAG MODULE WIRING HARNESS-SIDE CONNECTOR

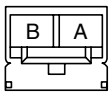

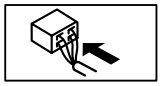

Diagnostic procedure

STEP	INSPECTION		ACTION
1	**INSPECT PASSENGER-SIDE AIR BAG MODULE** • Using the WDS or equivalent, verify the following PID/DATA monitor. (See 08–02–8 PID/DATA MONITOR TABLE.) — RES_AB_P • Is the resistance of the passenger-side air bag module normal? — Resistance: **1.3—4.7 ohms**	Yes	Replace the SAS control module. (See 08–10–10 SAS CONTROL MODULE REMOVAL/INSTALLATION.)
		No	Go to the next step.
2	**INSPECT PASSENGER-SIDE AIR BAG MODULE CONNECTOR** **Warning** • **Handling the air bag system components improperly can accidentally deploy the air bag modules and pre-tensioner seat belts, which may seriously injure you. Read the service warnings and cautions before handling the air bag system components.** **(See 08–10–2 SERVICE WARNINGS.)** **(See 08–10–4 SERVICE CAUTIONS.)** • Turn the ignition switch to the LOCK position. • Disconnect the negative battery cable and wait for **1 min or more**. • Remove the glove compartment. (See 09–17–7 GLOVE COMPARTMENT REMOVAL/INSTALLATION.) • Disconnect the passenger-side air bag module connector. • Is there any malfunction of the passenger-side air bag module connector?	Yes	Replace the air bag wiring harness.
		No	Go to the next step.
3	**VERIFY WHETHER MALFUNCTION IS IN PASSENGER-SIDE AIR BAG MODULE OR RELATED WIRING HARNESS** • Connect the leads of the **SST** (Fuel and thermometer checker) or apply **2-ohm** resistance to passenger-side air bag module connector terminals A and B. • Set the resistance of the **SST** (Fuel and thermometer checker) to the **2-ohm** position. • Connect the negative battery cable. • Turn the ignition switch to the ON position. • Are DTCs B1925, B1933, B1935 and/or B1938 indicated?	Yes	Replace the air bag wiring harness, then go to the next step.
		No	Replace the passenger-side air bag module. (See 08–10–6 PASSENGER-SIDE AIR BAG MODULE REMOVAL/INSTALLATION.)

STEP	INSPECTION		ACTION
4	**INSPECT WIRING HARNESS BETWEEN PASSENGER-SIDE AIR BAG MODULE AND SAS CONTROL MODULE** • Turn the ignition switch to the LOCK position. • Disconnect the negative battery cable and wait for **1 min or more**. • Disconnect the driver and passenger-side front seat connectors. • Disconnect the driver and passenger-side curtain air bag module connectors. • Remove the front console. • Inspect the wiring harness between SAS control module terminal 1V and passenger-side air bag module terminal A, SAS control module terminal 1S and passenger-side side air bag module terminal B for the following: — Short to ground — Short to power supply — Open circuit • Is the wiring harness normal?	Yes	Replace the SAS control module. (See 08–10–10 SAS CONTROL MODULE REMOVAL/ INSTALLATION.)
		No	Replace the air bag wiring harness.

DTC B2477

DPE080200000W27

DTC B2477	Configuration error
DETECTION CONDITION	**Warning** • **Detection conditions are for understanding the DTC outline before performing an inspection. Performing an inspection according to only the detection conditions may cause injury due to an operating error, or damage the system. When performing an inspection, always follow the inspection procedure.** • SAS control module configuration has not been performed correctly.
POSSIBLE CAUSE	• SAS control module configuration error • SAS control module malfunction

Diagnostic procedure

STEP	INSPECTION		ACTION
1	**INSPECT SAS CONTROL MODULE** • Using the WDS or equivalent, perform SAS control module configuration. • Is DTC B2477 indicated?	Yes	Replace the SAS control module. (See 08–10–10 SAS CONTROL MODULE REMOVAL/ INSTALLATION.)
		No	DTC troubleshooting completed.

DTC B104B, B104C, B104D, B2856, B2886, B2887

DPE080200000W28

DTC	B104B	**Driver-side air bag sensor No. 1 assembly incorrect**
	B104C	**Passenger-side air bag sensor No. 1 assembly incorrect**
	B104D	**Crash zone sensor assembly incorrect**
	B2856	**Crash zone sensor system communication data error**
	B2886	**Passenger-side side air bag sensor No. 1 system communication data error**
	B2887	**Driver-side side air bag sensor No. 1 system communication data error**
DETECTION CONDITION		**Warning** • **Detection conditions are for understanding the DTC outline before performing an inspection. Performing an inspection according to only the detection conditions may cause injury due to an operating error, or damage the system. When performing an inspection, always follow the inspection procedure.** • The SAS control module detects an error of impact magnitude set in the sensor, which occurs due to installation mismatch of the crash zone sensor or side air bag sensors.
POSSIBLE CAUSE		• Crash zone sensor misinstalled with wrong sensor • Driver-side side air bag sensor No. 1 misinstalled with wrong sensor • Passenger-side side air bag sensor No. 1 misinstalled with wrong sensor

Diagnostic procedure

STEP	INSPECTION		ACTION
1	**INSPECT EACH SENSOR FOR INSTALLATION POSITION** **Warning** • **Handling the air bag system components improperly can accidentally deploy the air bag modules and pre-tensioner seat belts, which may seriously injure you. Read the service warnings and cautions before handling the air bag system components.** **(See 08–10–2 SERVICE WARNINGS.)** **(See 08–10–4 SERVICE CAUTIONS.)** • Turn the ignition switch to the LOCK position. • Disconnect the negative battery cable and wait for **1 min or more**. • Verify that the crash zone sensor or side air bag sensor No. 1 is installed in the correct position. • Is each sensor installed correctly?	Yes	Go to the next step.
		No	Install the each sensor correctly, then go to the next step.
2	**INSPECT SAS CONTROL MODULE** • Connect the negative battery cable. • Turn the ignition switch to the ON position. • Are DTCs B104B, B104C, B104D, B2856, B2886 and/or B2887 indicated?	Yes	Replace the SAS control module. (See 08–10–10 SAS CONTROL MODULE REMOVAL/ INSTALLATION.)
		No	DTC troubleshooting completed.

DTC B2867

DPE080200000W29

DTC B2867	Poor connection of any SAS control module connectors
DETECTION CONDITION	**Warning** • **Detection conditions are for understanding the DTC outline before performing an inspection. Performing an inspection according to only the detection conditions may cause injury due to an operating error, or damage the system. When performing an inspection, always follow the inspection procedure.** • There is no continuity between the poor connection detector bar terminals of the SAS control module.
POSSIBLE CAUSE	• Poor connection of any SAS control module connectors • Malfunction of any SAS control module connectors • SAS control module malfunction

SAS CONTROL MODULE WIRING
HARNESS-SIDE CONNECTOR

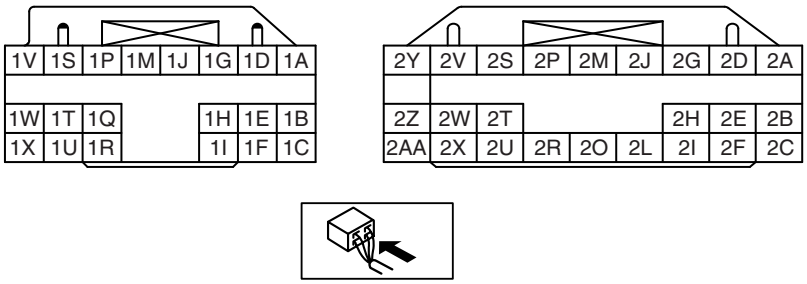

Diagnostic procedure

STEP	INSPECTION		ACTION
1	**VERIFY THAT ALL SAS CONTROL MODULE CONNECTORS ARE CONNECTED WITH SAS CONTROL MODULE** **Warning** • **Handling the air bag system components improperly can accidentally deploy the air bag modules and pre-tensioner seat belts, which may seriously injure you. Read the service warnings and cautions before handling the air bag system components.** **(See 08–10–2 SERVICE WARNINGS.)** **(See08–10–4 SERVICE CAUTIONS.)** • Turn the ignition switch to the LOCK position. • Disconnect the negative battery cable and wait for **1 min or more**. • Partially peel back the floor covering. • Are all SAS control module connectors securely connected?	Yes	Go to the next step.
		No	Reconnect the connector properly.
2	**INSPECT ALL SAS CONTROL MODULE CONNECTORS** • Remove the column cover. (See 09–17–7 COLUMN COVER REMOVAL/INSTALLATION.) • Disconnect the clock spring connector. • Remove the glove compartment. (See 09–17–7 GLOVE COMPARTMENT REMOVAL/INSTALLATION.) • Disconnect the passenger-side air bag module connector. • Disconnect the driver and passenger-side side air bag module connectors. • Remove the C-pillar trim. (See 09–17–17 C-PILLAR TRIM REMOVAL/INSTALLATION.) • Disconnect the driver and passenger-side curtain air bag module connectors. • Remove the B-pillar lower trim. (See 09–17–16 B-PILLAR LOWER TRIM REMOVAL/INSTALLATION.) • Disconnect the driver and passenger-side pre-tensioner seat belt connectors. • Remove the front console. (See 09–17–13 FRONT CONSOLE REMOVAL/INSTALLATION.) • Disconnect the SAS control module connector. • Are the poor connection detector bars of SAS control module connectors normal?	Yes	**[Present malfunction diagnosis]** • Replace the SAS control module. (See 08–10–10 SAS CONTROL MODULE REMOVAL/INSTALLATION.) **[Past malfunction diagnosis]** • DTC troubleshooting completed.
		No	Replace the air bag wiring harness.

08–03 SYMPTOM TROUBLESHOOTING

AIR BAG SYSTEM 08–03–1
NO. 1 AIR BAG SYSTEM WARNING LIGHT DOES NOT ILLUMINATE 08–03–1
NO. 2 AIR BAG SYSTEM WARNING LIGHT ILLUMINATES CONSTANTLY 08–03–1

AIR BAG SYSTEM

DPE080300000W01

Troubleshooting Index

- Use the chart below to verify the symptoms of the trouble in order to diagnose the appropriate area.

No.	Troubleshooting item	Description	Page
1	Air bag system warning light does not illuminate.	Malfunction in air bag system warning light circuit	(See 08–03–1 NO. 1 AIR BAG SYSTEM WARNING LIGHT DOES NOT ILLUMINATE.)
2	Air bag system warning light illuminates constantly.	Malfunction in air bag system warning light circuit	(See 08–03–1 NO. 2 AIR BAG SYSTEM WARNING LIGHT ILLUMINATES CONSTANTLY.)

NO. 1 AIR BAG SYSTEM WARNING LIGHT DOES NOT ILLUMINATE

DPE080300000W02

1	**Air bag system warning light does not illuminate.**
DETECTION CONDITION	Malfunction in air bag system warning light circuit
POSSIBLE CAUSE	• SAS control module malfunction • Instrument cluster malfunction • CAN communication network malfunction

Diagnostic Procedure

STEP	INSPECTION		ACTION
1	**CONFIRM DTC U0151 USING WDS OR EQUIVALENT** • Retrieve DTC from the SAS control module and instrument cluster. • Is DTC U0151 retrieved?	Yes	Network communication for related systems has a malfunction. Repair or replace if necessary.
		No	Inspect the instrument cluster. If the instrument cluster is normal, go to the next step. If the instrument cluster has a malfunction, replace the instrument cluster.
2	**CONFIRM DTC B2477 FOR INSTRUMENT CLUSTER USING WDS OR EQUIVALENT** • Is DTC B2477 retrieved?	Yes	Re-configure the instrument cluster.
		No	Replace the SAS control module. (See 08–10–10 SAS CONTROL MODULE REMOVAL/ INSTALLATION.)

NO. 2 AIR BAG SYSTEM WARNING LIGHT ILLUMINATES CONSTANTLY

DPE080300000W03

2	**Air bag system warning light illuminates constantly.**
DETECTION CONDITION	Malfunction in air bag system warning light circuit
POSSIBLE CAUSE	• SAS control module malfunction • Instrument cluster (circuit board) malfunction • CAN communication network malfunction

Diagnostic Procedure

- When performing an asterisked (*) troubleshooting inspection, slightly shake the wiring harness and connectors while performing the inspection to discover whether poor contact points are the cause of any intermittent malfunction. If there is a problem, verify that the connectors, terminals and wiring harness are connected correctly and undamaged.

STEP	INSPECTION		ACTION
1	**VERIFY DTC IN SAS CONTROL MODULE MEMORY** • Have DTCs been record in the memory?	Yes	Perform inspection using appropriate DTC.
		No	Inspect the instrument cluster. (See 09–22–1 INSTRUMENT CLUSTER REMOVAL/ INSTALLATION) If the instrument cluster is normal, go to the next step. If the instrument cluster has a malfunction, replace the instrument cluster.
2	**INSPECT AIR BAG SYSTEM WARNING LIGHT CIRCUIT IN INSTRUMENT CLUSTER** • Turn the ignition switch to the ON position. • Does air bag system warning light go out?	Yes	Inspect the connectors and terminals of the SAS control module. Repair or replace if necessary.
		No	Go to the next step.
* 3	**INSPECT SAS CONTROL MODULE** • Disconnect the SAS control module connector. • Turn the ignition switch to the ON position. • Verify the voltage at terminal 1W. • Is the voltage **B+**?	Yes	Replace the SAS control module. (See 08–10–10 SAS CONTROL MODULE REMOVAL/ INSTALLATION.)
		No	Inspect the battery power supply circuit and ground circuit.

08–10 AIR BAG SYSTEM

LOCATION INDEX. 08–10–1
SERVICE WARNINGS. 08–10–2
SERVICE CAUTIONS 08–10–4
DRIVER-SIDE AIR BAG MODULE REMOVAL/ INSTALLATION 08–10–5
PASSENGER-SIDE AIR BAG MODULE REMOVAL/ INSTALLATION 08–10–6
SIDE AIR BAG MODULE REMOVAL/INSTALLATION 08–10–7
CURTAIN AIR BAG MODULE REMOVAL/ INSTALLATION 08–10–8
CRASH ZONE SENSOR REMOVAL/ INSTALLATION 08–10–10
SAS CONTROL MODULE REMOVAL/ INSTALLATION 08–10–10
SAS CONTROL MODULE CONFIGURATION 08–10–11
SIDE AIR BAG SENSOR No. 1 REMOVAL/ INSTALLATION 08–10–11
SIDE AIR BAG SENSOR No. 2 REMOVAL/ INSTALLATION. 08–10–12
CLOCK SPRING REMOVAL/ INSTALLATION. 08–10–13
CLOCK SPRING ADJUSTMENT 08–10–14
CLOCK SPRING INSPECTION 08–10–15
PASSENGER AIR BAG DEACTIVATION (PAD) SWITCH REMOVAL/INSTALLATION. . .08–10–16
PASSENGER AIR BAG DEACTIVATION (PAD) SWITCH INSPECTION. 08–10–16
PASSENGER AIR BAG DEACTIVATION (PAD) INDICATOR REMOVAL/ INSTALLATION. 08–10–17
AIR BAG MODULE AND PRE-TENSIONER SEAT BELT DEPLOYMENT PROCEDURES. 08–10–17
AIR BAG MODULE AND PRE-TENSIONER SEAT BELT DISPOSAL PROCEDURES 08–10–29
INSPECTION OF SST (DEPLOYMENT TOOL) 08–10–30

LOCATION INDEX

DPE081000000W01

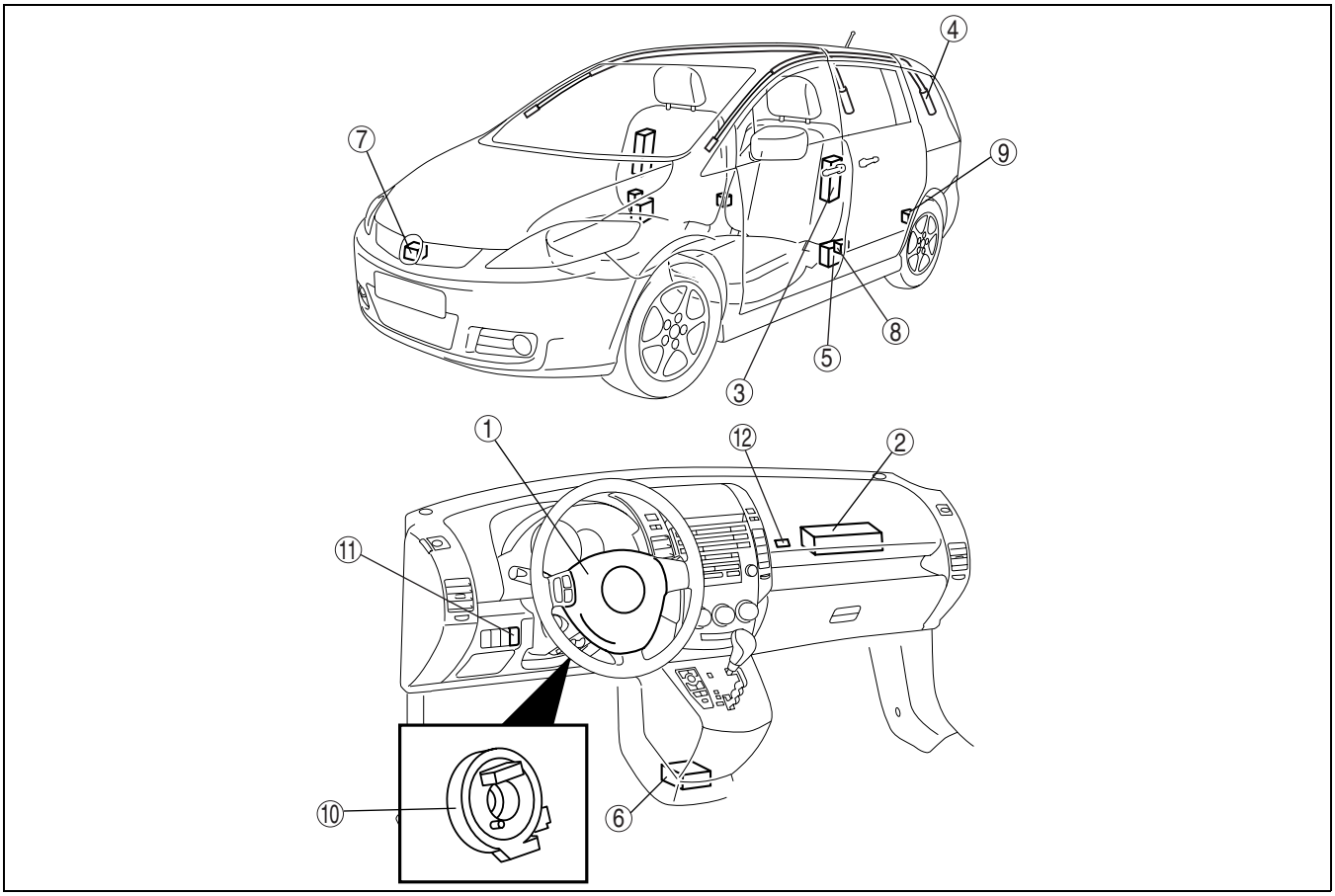

DPE810ZW1001

1	Driver-side air bag module (See 08–10–5 DRIVER-SIDE AIR BAG MODULE REMOVAL/INSTALLATION.) (See 08–10–17 AIR BAG MODULE AND PRE-TENSIONER SEAT BELT DEPLOYMENT PROCEDURES.)
2	Passenger-side air bag module (See 08–10–6 PASSENGER-SIDE AIR BAG MODULE REMOVAL/INSTALLATION.) (See 08–10–17 AIR BAG MODULE AND PRE-TENSIONER SEAT BELT DEPLOYMENT PROCEDURES.)
3	Side air bag module (See 08–10–7 SIDE AIR BAG MODULE REMOVAL/INSTALLATION.) (See 08–10–17 AIR BAG MODULE AND PRE-TENSIONER SEAT BELT DEPLOYMENT PROCEDURES.)
4	Curtain air bag module (See 08–10–8 CURTAIN AIR BAG MODULE REMOVAL/INSTALLATION.) (See 08–10–17 AIR BAG MODULE AND PRE-TENSIONER SEAT BELT DEPLOYMENT PROCEDURES.)
5	Pre-tensioner seat belt (See 08–10–17 AIR BAG MODULE AND PRE-TENSIONER SEAT BELT DEPLOYMENT PROCEDURES.)

6	SAS control module (See 08–10–10 SAS CONTROL MODULE REMOVAL/INSTALLATION.)
7	Crash zone sensor (See 08–10–10 CRASH ZONE SENSOR REMOVAL/INSTALLATION.)
8	Side air bag sensor No. 1 (See 08–10–11 SIDE AIR BAG SENSOR No. 1 REMOVAL/INSTALLATION.)
9	Side air bag sensor No. 2 (See 08–10–12 SIDE AIR BAG SENSOR No. 2 REMOVAL/INSTALLATION.)
10	Clock spring (See 08–10–13 CLOCK SPRING REMOVAL/INSTALLATION.) (See 08–10–15 CLOCK SPRING INSPECTION.) (See 08–10–14 CLOCK SPRING ADJUSTMENT.)
11	Passenger air bag deactivation (PAD) switch (See 08–10–16 PASSENGER AIR BAG DEACTIVATION (PAD) SWITCH REMOVAL/INSTALLATION.) (See 08–10–16 PASSENGER AIR BAG DEACTIVATION (PAD) SWITCH INSPECTION.)
12	Passenger air bag deactivation (PAD) indicator (See 08–10–17 PASSENGER AIR BAG DEACTIVATION (PAD) INDICATOR REMOVAL/INSTALLATION.)

SERVICE WARNINGS

DPE081000000W02

Air Bag Module Inspection

- Inspecting an air bag module using a tester can operate (deploy) the air bag module, which may cause serious injury. Do not use a tester to inspect an air bag module. Always use the on-board diagnostic function to diagnose the air bag module for malfunctions.

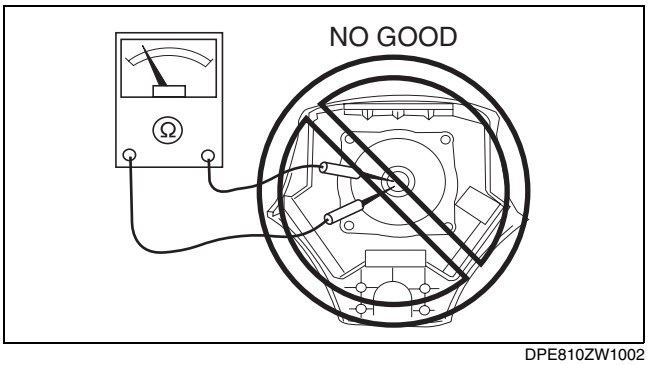

DPE810ZW1002

Air Bag Module Handling

- Handling a live (undeployed) air bag module that is pointed toward your body could result in serious injury if the air bag module were to accidentally operate (deploy). When carrying a live (undeployed) air bag module, point the deployment surface away from your body to lessen the chance of injury in case it operates (deploys).

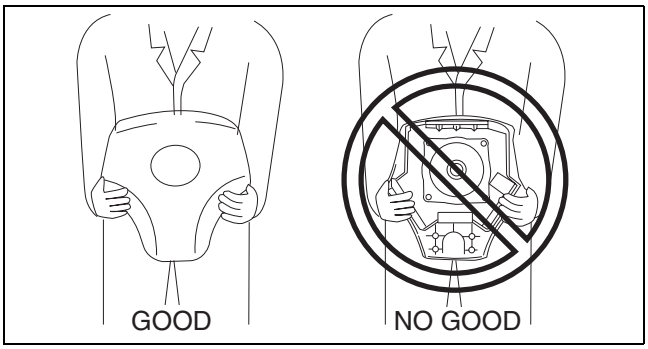

DPE810ZW1003

- A live (undeployed) air bag module placed with its deployment surface to ground is dangerous. If the air bag module were to accidentally operate (deploy), it could cause serious injury. Always place a live (undeployed) air bag module with its deployment surface up.

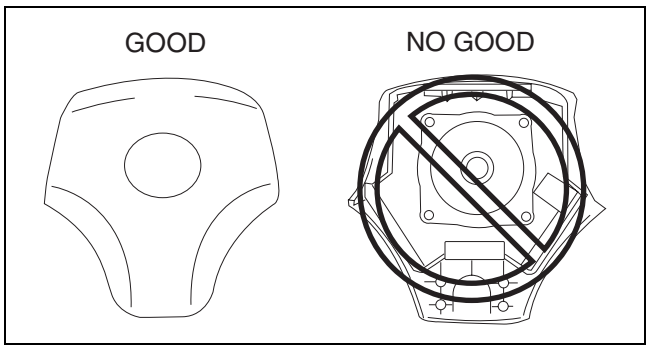

DPE810ZW1004

Side Air Bag Module Handling

- When a side air bag module operates (deploys) due to a collision, the interior of the seat back (pad, frame, trim) may become damaged. If a side air bag does not operate (deploy) normally from a seat back that has been reused, a serious accident may result. After a side air bag has operated (deployed), always replace both the side air bag module and the seat back (pad, frame, trim) with new parts. After servicing, verify that the seat operates normally and that the wiring harness is not caught.

SAS control module Handling

- Removing the SAS control module or disconnecting the SAS control module connector with the ignition switch at the ON position can activate the sensor in the SAS control module and operate (deploy) the air bags and pre-tensioner seat belts, which may cause serious injury. Before removing the SAS control module or disconnecting the SAS control module connector, always turn the ignition switch to the LOCK position, disconnect the negative battery cable, and then wait for 1 min or more to allow the backup power supply of the SAS control module to deplete its stored power.
- Connecting the SAS control module connector with the SAS control module not securely fixed to the vehicle is dangerous. The sensor in the SAS control module could send an electrical signal to the air bag modules and pre-tensioner seat belts. This will operate (deploy) the air bags and pre-tensioner seat belts, which may result in serious injury. Therefore, before connecting the connector, securely fix the SAS control module to the vehicle.
- Because a sensor is built into the SAS control module, once the air bags and pre-tensioner seat belts have operated (deployed) due to a collision or other causes, the SAS control module must be replaced with a new one even if the used one does not have any visible external damage or deformation. The used SAS control module may have been damaged internally which may cause improper operation. If the SAS control module is reused, the air bags and pre-tensioner seat belts may not operate (deploy) normally, which could result in a serious accident. Always replace the SAS control module with a new one. The SAS control module cannot be bench-checked or self-checked.

Crash Zone Sensor Handling

- Removing the crash zone sensor or disconnecting the crash zone sensor connector with the ignition switch at the ON position can activate the crash zone sensor and operate (deploy) the air bags and pre-tensioner seat belts, which may cause serious injury. Before removing the crash zone sensor or disconnecting the crash zone sensor connector, always turn the ignition switch to the LOCK position, disconnect the negative battery cable, and then wait for 1 min or more to allow the backup power supply of the SAS control module to deplete its stored power.
- If the crash zone sensor is subjected to shock or the sensor is disassembled, the air bags and pre-tensioner seat belts may accidentally operate (deploy) and cause injury, or the system may fail to operate normally and cause a serious accident. Do not subject the crash zone sensor to shock or disassemble the sensor.
- Because a sensor is built into the crash zone sensor, once the air bags and pre-tensioner seat belts have operated (deployed) due to a collision or other causes, the crash zone sensor must be replaced with a new one even if the used one does not have any visible external damage or deformation. If the crash zone sensor is reused, the air bags and pre-tensioner seat belts may not operate (deploy) normally, which could result in a serious accident. Always replace the crash zone sensor with a new one. The crash zone sensor cannot be bench-checked or self-checked.

Side Air Bag Sensor Handling

- Removing the side air bag sensor or disconnecting the side air bag sensor connector with the ignition switch at the ON position can activate the side air bag sensor and operate (deploy) the side air bag, which may cause serious injury. Before removing the side air bag sensor or disconnecting the side air bag sensor connector, always turn the ignition switch to the LOCK position, disconnect the negative battery cable, and then wait for 1 min or more to allow the backup power supply of the SAS control module to deplete its stored power.
- If the side air bag sensor is subjected to shock or the sensor is disassembled, the side air bag may accidentally

operate (deploy) and cause injury, or the system may fail to operate normally and cause a serious accident. Do not subject the side air bag sensor to shock or disassemble the sensor.
- Because a sensor is built into the side air bag sensor, once the air bag has operated (deployed) due to a collision or other causes, the side air bag sensor must be replaced with a new one even if the used one does not have any visible external damage or deformation. If the side air bag sensor is reused, the side air bag may not operate (deploy) normally, which could result in a serious accident. Always replace the side air bag sensor with a new one. The side air bag sensor cannot be bench-checked or self-checked.

Pre-tensioner Seat Belt Inspection
- Inspecting a pre-tensioner seat belt using a tester can operate (deploy) the pre-tensioner seat belt, which may cause serious injury. Do not use a tester to inspect a pre-tensioner seat belt. Always use the on-board diagnostic function to diagnose the pre-tensioner seat belt for malfunctions.

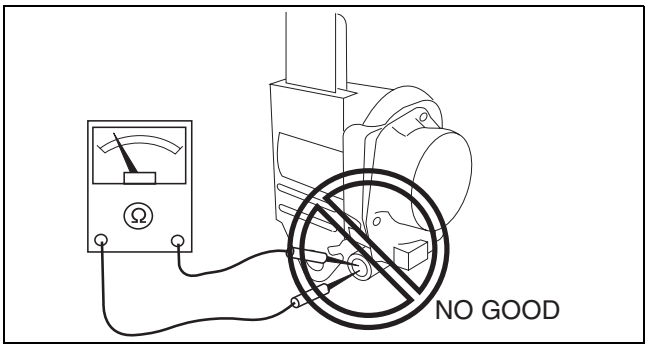

CHU0810W603

SERVICE CAUTIONS

DPE081000000W03

Air Bag System Component Disassembly
- Disassembling the air bag system components could cause it to not operate (deploy) normally. Never disassemble any air bag system components.

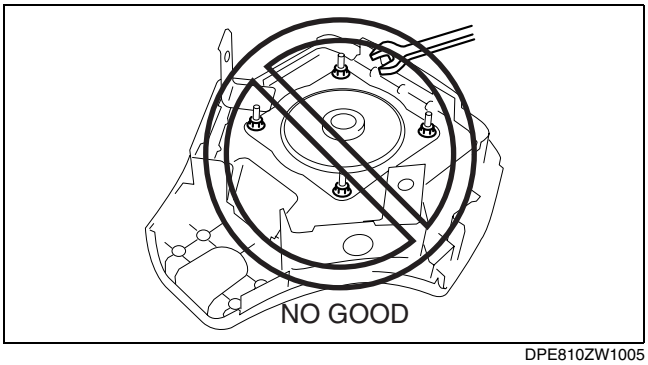

DPE810ZW1005

Air Bag Module, Pre-tensioner Seat Belt Handling
- Oil, grease, or water on the air bag modules may cause the air bags and pre-tensioner seat belts to fail to operate (deploy) in an accident. Never allow oil, grease, or water to get on the air bag modules or pre-tensioner seat belts.
- Inserting a screwdriver or similar object into the connector of an air bag module or a pre-tensioner seat belt may damage the connector and cause the air bag module or the pre-tensioner seat belt to operate (deploy) improperly, which may cause serious injury. Never insert any foreign objects into the air bag module or seat belt connectors.

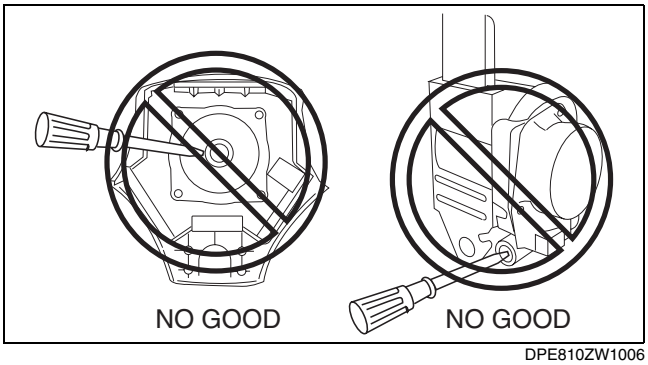

DPE810ZW1006

Air Bag Module, Pre-tensioner Seat Belt Reuse
- Even if an air bag module or a pre-tensioner seat belt does not operate (deploy) in a collision and does not have any external signs of damage, it may have been damaged internally, which may cause improper operation. Before reusing a live (undeployed) air bag module and the pre-tensioner seat belts, always use the on-board diagnostic to diagnose the air bag module and the pre-tensioner seat belts to verify that they have no malfunction.

Air Bag Wiring Harness Repair

- Incorrectly repairing an air bag wiring harness can accidentally operate (deploy) the air bag module and pre-tensioner seat belts. If a problem is found in the air bag wiring harness, always replace the wiring harness with a new one.

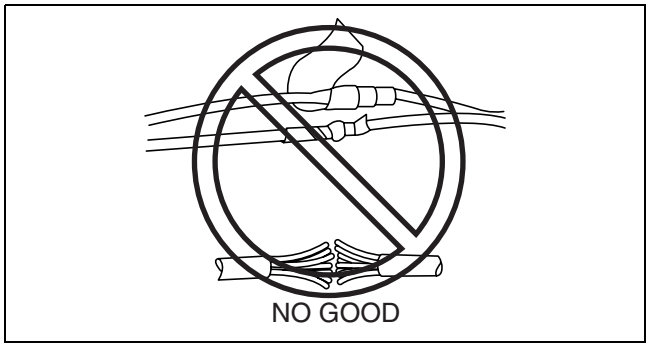

CHU0810W606

DRIVER-SIDE AIR BAG MODULE REMOVAL/INSTALLATION

DPE081057010W01

Warning

- **Handling the air bag module improperly can accidentally deploy the air bag module, which may seriously injure you. Read the service warnings and cautions before handling the air bag module. (See 08–10–2 SERVICE WARNINGS.) (See 08–10–4 SERVICE CAUTIONS.)**

1. Turn the ignition switch to the LOCK position.
2. Disconnect the negative battery cable and wait for **1 min or more**.
3. Remove in the order indicated in the table.

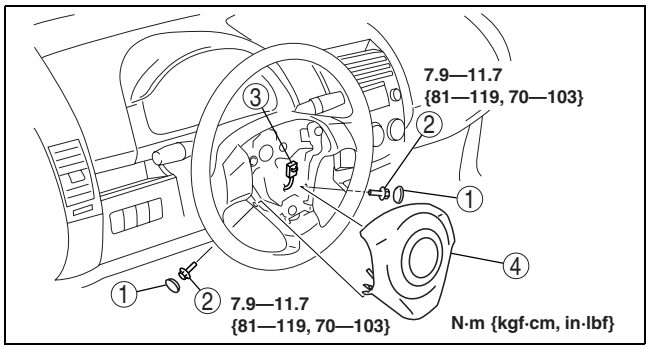

DPE810ZW1007

1	Cover
2	Bolt
3	Connector (See 08–10–6 Connector Removal Note.)
4	Driver-side air bag module

4. Install in the reverse order of removal.
5. Turn the ignition switch to the ON position.
6. Verify that the air bag system warning light illuminates for **approx. 6 s** and goes out.
   - If the air bag system warning light does not operate, refer to the on-board diagnostic system (air bag system) and perform inspection of the system.

Connector Removal Note

1. Using a flathead screwdriver, pry out the connector stopper plate.
2. Disconnect the connector.

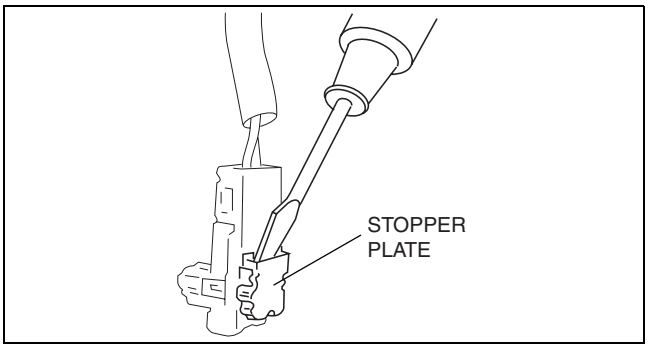

CHU0810W003

PASSENGER-SIDE AIR BAG MODULE REMOVAL/INSTALLATION

DPE081057050W01

Warning

- **Handling the air bag module improperly can accidentally deploy the air bag module, which may seriously injure you. Read the service warnings and cautions before handling the air bag module. (See 08–10–2 SERVICE WARNINGS.) (See 08–10–4 SERVICE CAUTIONS.)**

1. Turn the ignition switch to the LOCK position.
2. Disconnect the negative battery cable and wait for **1 min or more**.
3. Remove the following parts:
   (1) Side wall (See 09–17–11 SIDE WALL REMOVAL/INSTALLATION.)
   (2) Front console (See 09–17–13 FRONT CONSOLE REMOVAL/INSTALLATION.)
   (3) Front scuff plate inner (passenger's side) (See 09–17–19 FRONT SCUFF PLATE REMOVAL/INSTALLATION.)
   (4) Front side trim (passenger's side) (See 09–17–15 FRONT SIDE TRIM REMOVAL/INSTALLATION.)
   (5) Glove compartment (See 09–17–7 GLOVE COMPARTMENT REMOVAL/INSTALLATION.)
   (6) Car-navigation unit (vehicles with car-navigation system) (See 09–20–8 CAR-NAVIGATION UNIT REMOVAL/INSTALLATION.)
4. Remove in the order indicated in the table.

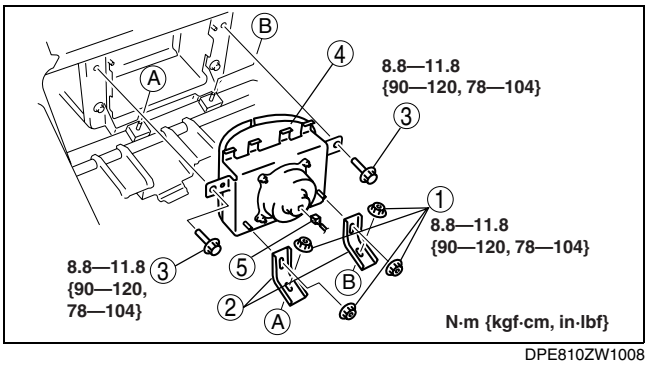

DPE810ZW1008

1	Nut
2	Bracket
3	Bolt
4	Passenger-side air bag module (See 08–10–6 Passenger Air Bag Module Removal Note.)
5	Connector

5. Install in the reverse order of removal.
6. Turn the ignition switch to the ON position.
7. Verify that the air bag system warning light illuminates for **approx. 6 s** and goes out.
   - If the air bag system warning light does not operate, refer to the on-board diagnostic system (air bag system) and perform inspection of the system.

Passenger Air Bag Module Removal Note

1. Remove the passenger-side air bag module in the order indicated below.
   (1) Disengage the tab lock by sliding the passenger-side air bag module upward.
   (2) Slide the passenger-side air bag module rearward.
   (3) Remove the passenger-side air bag module by pulling it outward and then down.

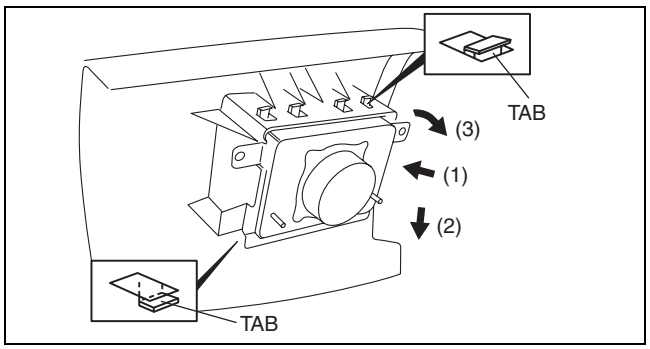

DPE810ZW1009

Connector Removal Note

1. Using a flathead screwdriver, pry out the connector stopper plate.
2. Disconnect the connector.

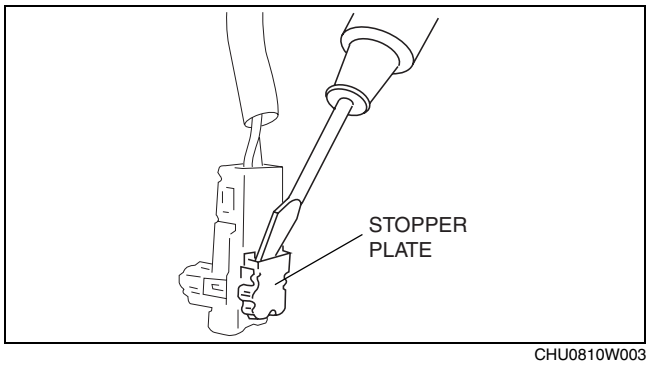

CHU0810W003

SIDE AIR BAG MODULE REMOVAL/INSTALLATION

DPE081000147W01

Warning

- **Handling the air bag module improperly can accidentally operate (deploy) the air bag module, which may seriously injure you. Read the service warnings and cautions before handling the air bag module. (See 08–10–2 SERVICE WARNINGS.) (See 08–10–4 SERVICE CAUTIONS.)**
- **If the side air bag module is installed with debris in the seat back, the foreign material may be scattered when the side air bag module operates (deploys), causing injury. Verify that there is no foreign material in the seat back before installing the side air bag module.**

1. Turn the ignition switch to the LOCK position.
2. Disconnect the negative battery cable and wait for **1 min or more**.
3. Remove the front seat. (See 09–13–1 FRONT SEAT REMOVAL/INSTALLATION.)
4. Partially peel back the seat back trim.
5. Partially peel back the seat back pad.
6. Remove in the order indicated in the table.

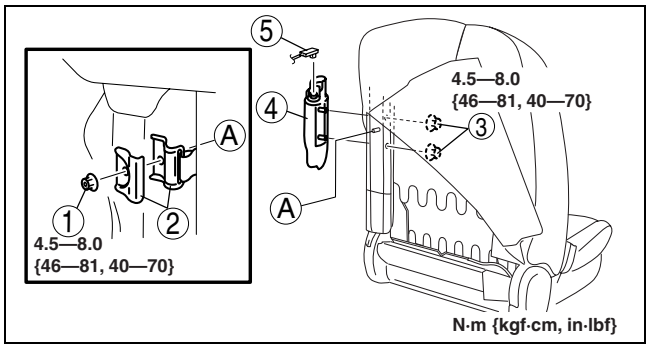

DPE810ZW1010

1	Nut A
2	Holder bracket
3	Nut B
4	Side air bag module
5	Connector (See 08–10–8 Connector Removal Note.)

7. Install in the reverse order of removal.
8. Turn the ignition switch to the ON position.

9. Verify that the air bag system warning light illuminates for **approx. 6 s** and goes out.
   - If the air bag system warning light does not operate, refer to the on-board diagnostic system (air bag system) and perform inspection of the system.

Connector Removal Note

1. Using a flathead screwdriver, pry out the connector stopper plate.
2. Disconnect the connector.

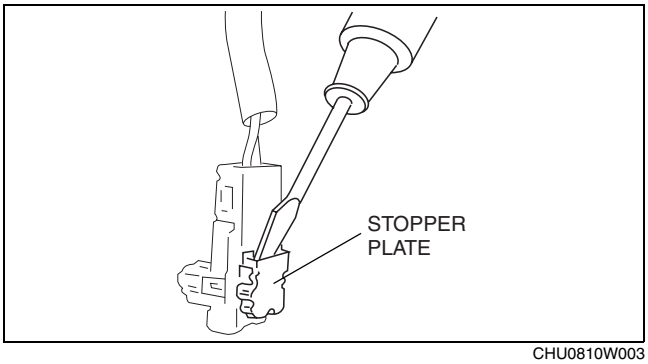

CHU0810W003

CURTAIN AIR BAG MODULE REMOVAL/INSTALLATION

DPE081000171W01

Warning

- **Handling the air bag module improperly can accidentally deploy the air bag module, which may seriously injure you. Read the service warnings and cautions before handling the air bag module. (See 08–10–2 SERVICE WARNINGS.) (See 08–10–4 SERVICE CAUTIONS.)**

1. Turn the ignition switch to the LOCK position.
2. Disconnect the negative battery cable and wait for **1 min or more**.
3. Remove the following parts:
   (1) A-pillar trim (See 09–17–15 A-PILLAR TRIM REMOVAL/INSTALLATION.)
   (2) Front scuff plate inner (See 09–17–19 FRONT SCUFF PLATE REMOVAL/INSTALLATION.)
   (3) Rear scuff plate (See 09–17–19 REAR SCUFF PLATE REMOVAL/INSTALLATION.)
   (4) B-pillar lower trim (See 09–17–16 B-PILLAR LOWER TRIM REMOVAL/INSTALLATION.)
   (5) Front seat belt upper anchor installation bolt (See 08–11–1 FRONT SEAT BELT REMOVAL/INSTALLATION.)
   (6) B-pillar upper trim (See 09–17–16 B-PILLAR UPPER TRIM REMOVAL/INSTALLATION.)
   (7) Rear package tray lid (See 09–17–20 REAR PACKAGE TRAY LID REMOVAL/INSTALLATION.)
   (8) Third-row seat (See 09–13–8 THIRD-ROW SEAT REMOVAL/INSTALLATION.)
   (9) Rear header trim (See 09–17–20 REAR HEADER TRIM REMOVAL/INSTALLATION.)
   (10) Trunk end trim (See 09–17–20 TRUNK END TRIM REMOVAL/INSTALLATION.)
   (11) Third-row seat belt lower anchor installation bolt (See 08–11–5 THIRD-ROW SEAT BELT REMOVAL/INSTALLATION.)
   (12) Cargo compartment light (See 09–18–28 CARGO COMPARTMENT LIGHT REMOVAL/INSTALLATION.)
   (13) Trunk side trim (See 09–17–19 TRUNK SIDE TRIM REMOVAL/INSTALLATION.)
   (14) Second-row seat belt upper anchor installation bolt (See 08–11–3 SECOND-ROW SEAT BELT REMOVAL/INSTALLATION.)
   (15) C-pillar trim (See 09–17–17 C-PILLAR TRIM REMOVAL/INSTALLATION.)
   (16) RES unit cover (vehicles with RES) (See 09–20–25 RES UNIT REMOVAL/INSTALLATION.)
   (17) Map light (See 09–18–24 MAP LIGHT REMOVAL/INSTALLATION.)
   (18) Sunvisor (See 09–17–21 SUNVISOR REMOVAL/INSTALLATION.)
   (19) Assist handle (See 09–17–21 ASSIST HANDLE REMOVAL/INSTALLATION.)
   (20) Headliner (See 09–17–22 HEADLINER REMOVAL/INSTALLATION.)
   (21) Rear speaker (See 09–20–10 REAR SPEAKER REMOVAL/INSTALLATION.)

4. Remove in the order indicated in the table.

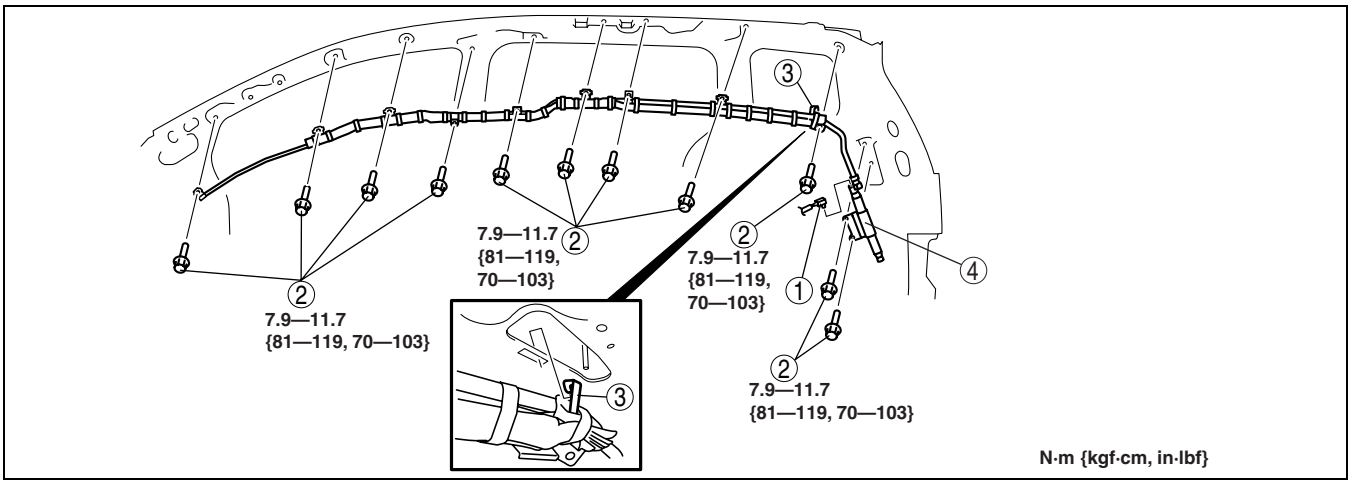

DPE810ZW1011

1	Connector (See 08–10–9 Connector Removal Note.)
2	Bolt

3	Hook
4	Curtain air bag module

5. Install in the reverse order of removal.
6. When the ignition switch is turned to the ON position verify that the air bag system warning light illuminates for **approx. 6 s** and goes out.
   - If the air bag system warning light does not operate, refer to the on-board diagnostic system (air bag system) and perform inspection of the system.

Connector Removal Note

1. Using a flathead screwdriver, pry out the connector stopper plate.
2. Disconnect the connector.

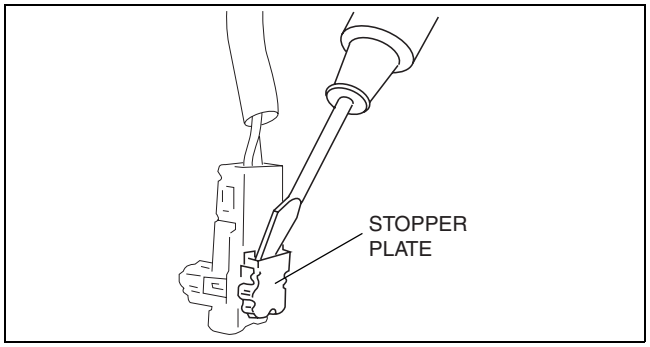

CHU0810W003

Curtain Air Bag Module Installation Note

1. Affix the double-sided adhesive tape for the curtain air bag module to the position shown in the figure.

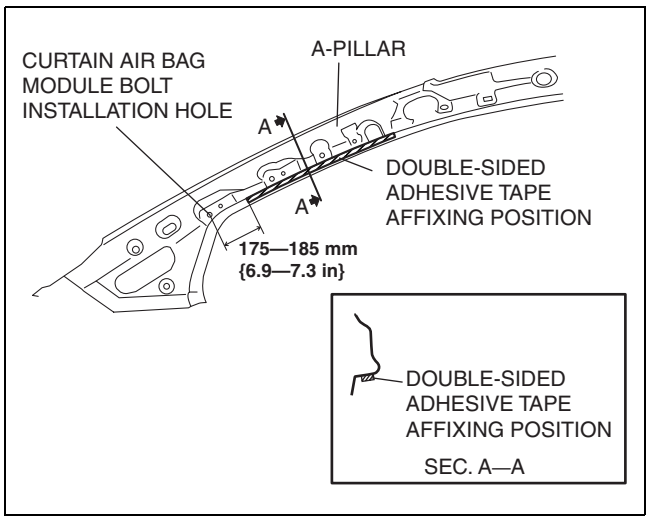

DPE810ZW1012

CRASH ZONE SENSOR REMOVAL/INSTALLATION

DPE081000145W01

Warning

- **Handling the crash zone sensor improperly can accidentally deploy the air bags and pre-tensioner seat belts, which may seriously injure you. Read the service warnings and cautions before handling the crash zone sensor. (See 08–10–2 SERVICE WARNINGS.) (See 08–10–4 SERVICE CAUTIONS.)**

1. Place alignment marks on the bonnet latch and shroud panel.
2. Turn the ignition switch to the LOCK position.
3. Disconnect the negative battery cable and wait for **1 min or more**.
4. Radiator grille (standard bumper type) (See 09–16–3 RADIATOR GRILLE REMOVAL/INSTALLATION.)
5. Front bumper (sport bumper type) (See 09–10–5 FRONT BUMPER REMOVAL/INSTALLATION.)
6. Remove in the order indicated in the table.

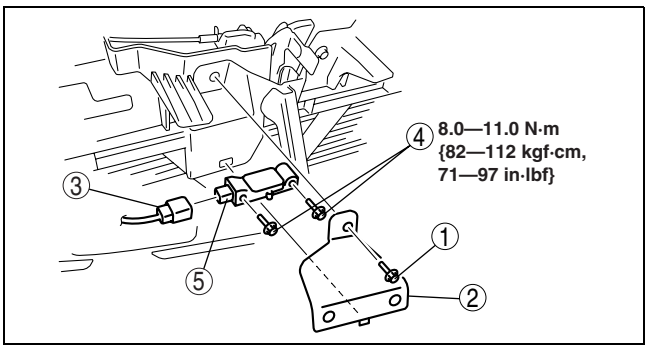

DPE810ZW1013

1	Bolt A
2	Cover
3	Connector
4	Bolt B
5	Crash zone sensor

7. Install in the reverse order of removal.
8. Turn the ignition switch to the ON position.
9. Verify that the air bag system warning light illuminates for **approx. 6 s** and goes out.
   - If the air bag system warning light does not operate, refer to the on-board diagnostic system (air bag system) and perform inspection of the system.

SAS CONTROL MODULE REMOVAL/INSTALLATION

DPE081057030W01

Warning

- **Handling the SAS control module improperly can accidentally deploy the air bag modules and pre-tensioner seat belt, which may seriously injure you. Read the service warnings and cautions before handling the air bag module. (See 08–10–2 SERVICE WARNINGS.) (See 08–10–4 SERVICE CAUTIONS.)**

Caution

- **Handling the SAS control module improperly can accidentally deploy the air bag modules and pre-tensioner seat belt, which may seriously injure you. If configuration is not completed before removing the SAS control module, DTC B2477 will be displayed.**

1. Perform SAS control module configuration when replacing it. (See 08–10–11 SAS CONTROL MODULE CONFIGURATIONS.)
2. Turn the ignition switch to the LOCK position.
3. Disconnect the negative battery cable and wait for **1 min or more**.
4. Remove the side wall. (See 09–17–11 SIDE WALL REMOVAL/INSTALLATION.)
5. Remove the front console. (See 09–17–13 FRONT CONSOLE REMOVAL/INSTALLATION.)

6. Remove in the order indicated in the table.

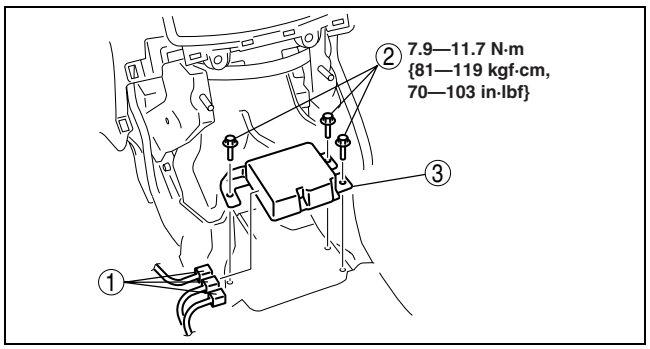

DPE810ZW1014

1	Connector
2	Bolt
3	SAS control module

7. Install in the reverse order of removal.
8. Turn the ignition switch to the ON position.
   - If the SAS control module is replaced, turn the ignition switch to the ON position for **20 s or more** after completing the configuration.
9. Verify that the air bag system warning light illuminates for **approx. 6 s** and goes out.
   - If the air bag system warning light does not operate, refer to the on-board diagnostic system (air bag system) and perform inspection of the system.

SAS CONTROL MODULE CONFIGURATION

DPE081057030W02

1. Connect the WDS or equivalent to the DLC-2 (16-pin).
2. Select “Module programming” from the menu.
3. Select “Programmable Module Installation”.
4. Select the following items and perform procedure according to the directions on the WDS or equivalent screen.

   Item
   “RCM”

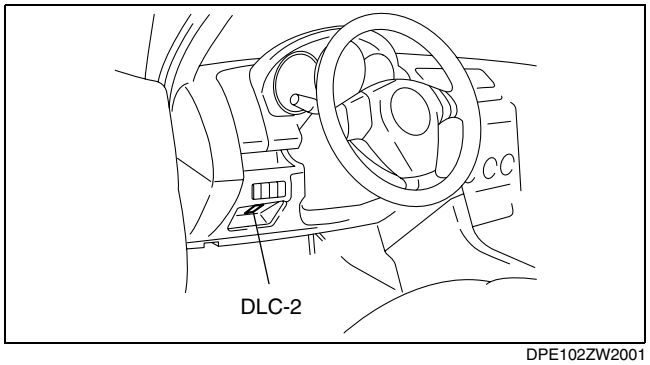

DPE102ZW2001

SIDE AIR BAG SENSOR NO. 1 REMOVAL/INSTALLATION

DPE081000146W01

Warning
- **Handling the side air bag sensor improperly can accidentally operate (deploy) the air bag module, which may seriously injure you. Read the service warnings and cautions before handling the side air bag sensor. (See 08–10–2 SERVICE WARNINGS.) (See 08–10–4 SERVICE CAUTIONS.)**

1. Turn the ignition switch to the LOCK position.
2. Disconnect the negative battery cable and wait for **1 min or more**.
3. Remove the following parts:
   (1) Front scuff plate inner (See 09–17–19 FRONT SCUFF PLATE REMOVAL/INSTALLATION.)
   (2) Rear scuff plate (See 09–17–19 REAR SCUFF PLATE REMOVAL/INSTALLATION.)
   (3) B-pillar lower trim (See 09–17–16 B-PILLAR LOWER TRIM REMOVAL/INSTALLATION.)
   (4) Front seat belt (See 08–11–1 FRONT SEAT BELT REMOVAL/INSTALLATION.)

4. Remove in the order indicated in the table.

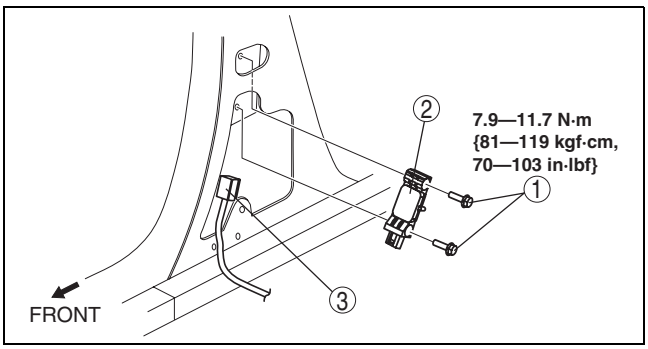

DPE810ZW1015

1	Bolt
2	Side air bag sensor No. 1
3	Connector

5. Install in the reverse order of removal.
6. Turn the ignition switch to the ON position and hold for **5 s or more**.

Caution
- **When turning the ignition switch to the ON position after replacing the side air bag sensor, performing the following operations will cancel the sensor code over-write, which could cause the air bags to fail to operate (deploy).**
  - **The ignition switch is turned to the LOCK position before the ignition switch is held in the ON position for 5 s or more.**
  - **The engine is started.**
- **If the above operations are performed and the sensor code over-write is canceled, it will be necessary to replace the sensor again.**

7. Verify that the air bag system warning light illuminates for **approx. 6 s** and goes out.
   - If the air bag system warning light does not operate, refer to the on-board diagnostic system (air bag system) and perform inspection of the system.

SIDE AIR BAG SENSOR NO. 2 REMOVAL/INSTALLATION

DPE081000146W02

Warning
- **Handling the side air bag sensor improperly can accidentally operate (deploy) the air bag module, which may seriously injure you. Read the service warnings and cautions before handling the side air bag sensor. (See 08–10–2 SERVICE WARNINGS.) (See 08–10–4 SERVICE CAUTIONS.)**

1. Turn the ignition switch to the LOCK position.
2. Disconnect the negative battery cable and wait for **1 min or more**.
3. Remove the following parts:
   (1) Rear package tray lid (See 09–17–20 REAR PACKAGE TRAY LID REMOVAL/INSTALLATION.)
   (2) Third-row seat (7-passenger model) (See 09–13–8 THIRD-ROW SEAT REMOVAL/INSTALLATION.)
   (3) Rear scuff plate (See 09–17–19 REAR SCUFF PLATE REMOVAL/INSTALLATION.)
   (4) Trunk end trim (See 09–17–20 TRUNK END TRIM REMOVAL/INSTALLATION.)
   (5) Third-row seat belt lower anchor installation bolt (7-passenger model) (See 08–11–5 THIRD-ROW SEAT BELT REMOVAL/INSTALLATION.)
   (6) Cargo compartment light (See 09–18–28 CARGO COMPARTMENT LIGHT REMOVAL/INSTALLATION.)
   (7) Trunk side trim (See 09–17–19 TRUNK SIDE TRIM REMOVAL/INSTALLATION.)

4. Remove in the order indicated in the table.

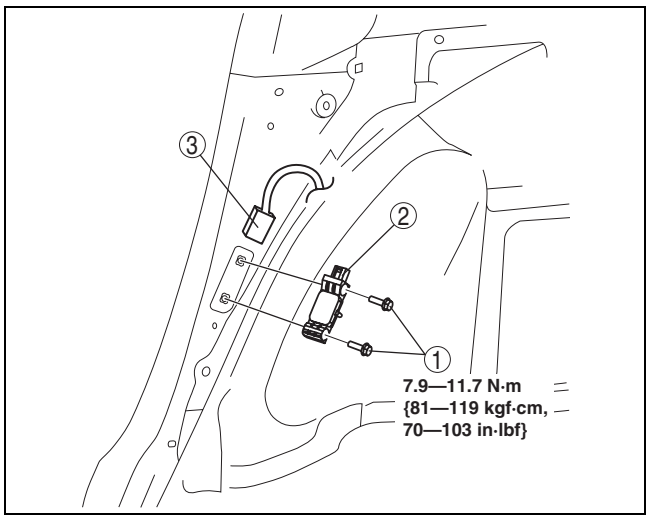

DPE810ZW1016

1	Bolt
2	Side air bag sensor No. 2
3	Connector

5. Install in the reverse order of removal.
6. Turn the ignition switch to the ON position and hold for **5 s or more**.

Caution
- **When turning the ignition switch to the ON position after replacing the side air bag sensor, performing the following operations will cancel the sensor code over-write, which could cause the air bags to fail to operate (deploy).**
  - **The ignition switch is turned to the LOCK position before the ignition switch is held in the ON position for 5 s or more.**
  - **The engine is started.**
- **If the above operations are performed and the sensor code over-write is canceled, it will be necessary to replace the sensor again.**

7. Verify that the air bag system warning light illuminates for **approx. 6 s** and goes out.
   - If the air bag system warning light does not operate, refer to the on-board diagnostic system (air bag system) and perform inspection of the system.

CLOCK SPRING REMOVAL/INSTALLATION

DPE081066123W01

1. Disconnect the negative battery cable.
2. Remove the following parts:
   (1) Driver-side air bag module (See 08–10–5 DRIVER-SIDE AIR BAG MODULE REMOVAL/INSTALLATION.)
   (2) Steering wheel (See 06-14–7 STEERING WHEEL AND COLUMN REMOVAL/INSTALLATION.)
   (3) Meter hood (See 09–17–7 METER HOOD REMOVAL/INSTALLATION.)
   (4) Column cover (See 09–17–7 COLUMN COVER REMOVAL/INSTALLATION.)
3. Remove in the order indicated in the table.

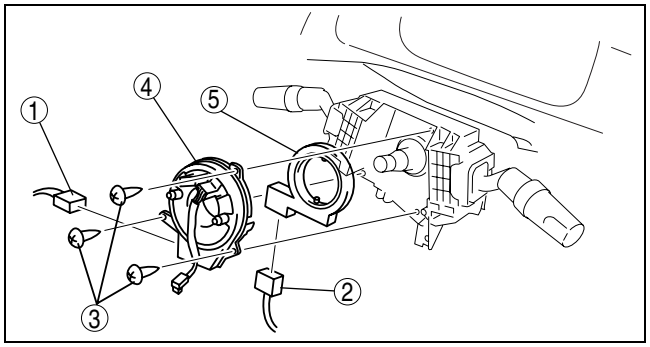

CPJ810ZWB012

1	Clock spring connector
2	Steering angle sensor connector
3	Screw

4	Clock spring (See 08–10–14 Clock Spring Installation Note.)
5	Steering angle sensor (See 08–10–14 Steering Angle Sensor Removal Note.)

4. Install in the reverse order of removal.
5. Turn the ignition switch to the ON position.
6. Verify that the air bag system warning light illuminates for **approx. 6 s** and goes out.
   - If the air bag system warning light does not operate, refer to the on-board diagnostic system (air bag system) and perform inspection of the system.

Clock Spring Installation Note

Caution
- **If the clock spring is not adjusted, the spring wire in the clock spring could over-wind and break when the steering wheel is turned. Always adjust the clock spring after installing it.**

1. Adjust the clock spring after installing it. (See 08–10–14 CLOCK SPRING ADJUSTMENT.)

Steering Angle Sensor Removal Note
1. Detach the tabs at the four locations shown in the figure and remove the steering angle sensor.

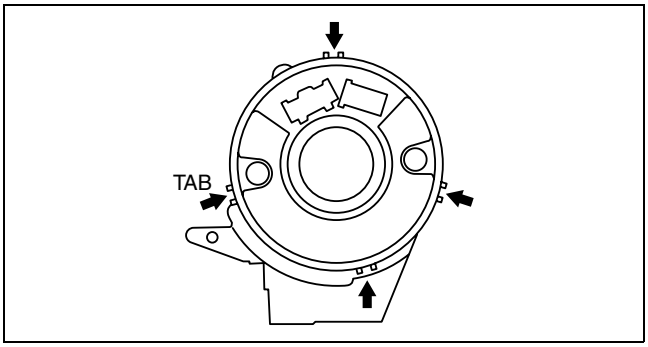

B3E0810W012

CLOCK SPRING ADJUSTMENT

DPE081066123W02

Note
- The adjustment procedure is also specified on the caution label of the clock spring.

1. Set the front tires straight-ahead.

Caution
- **The clock spring will break if over-wound. Do not forcibly turn the clock spring.**

2. Turn the clock spring clockwise until it stops.

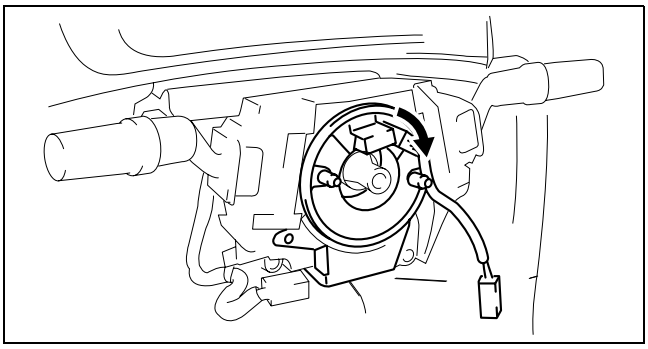

DPE810ZW1038

3. From the stopped position, turn the clock spring counterclockwise **2 3/4 turns**.

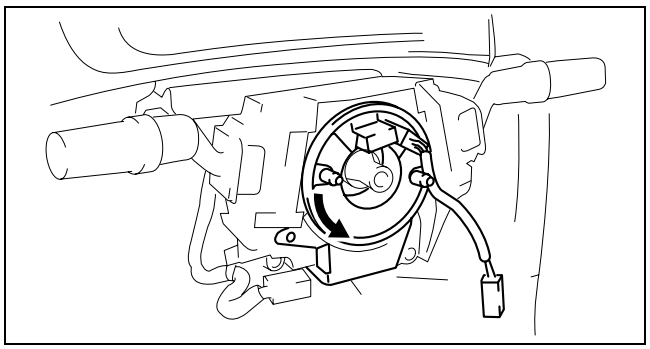

DPE810ZW1039

4. Align the marks.

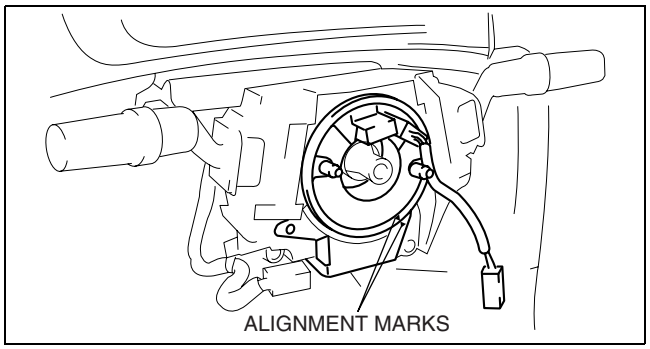

DPE810ZW1017

CLOCK SPRING INSPECTION

DPE081066123W03

1. Remove the clock spring. (See 08–10–13 CLOCK SPRING REMOVAL/INSTALLATION.)
2. Verify that the continuity is as indicated in the table.
   - If not as indicated in the table, replace the clock spring.

Note

- When the vehicle-side connector for the clock spring is disconnected, terminals 1J, 1L are shorted to prevent unexpected operation (deployment) of the air bag module.

○—○ : Continuity

Test condition	Terminal															
	1A	**1B**	**1C**	**1D**	**1E**	**1G**	**1J**	**1L**	**2A**	**2B**	**3C**	**3D**	**3E**	**3F**	**3G**	**3H**
Under any condition							○	○	○	○						
		○	—	—	—	—	—	—	—	—	—	—	—	—	—	○
				○	—	—	—	—	—	—	—	—	—	—	○	
	○	—	—	—	—	—	—	—	—	—	—	—	—	○		
			○	—	—	—	—	—	—	—	—	—	○			
						○	—	—	—	—	○					
					○	—	—	—	—	—	—	○				

DPE810ZW1018

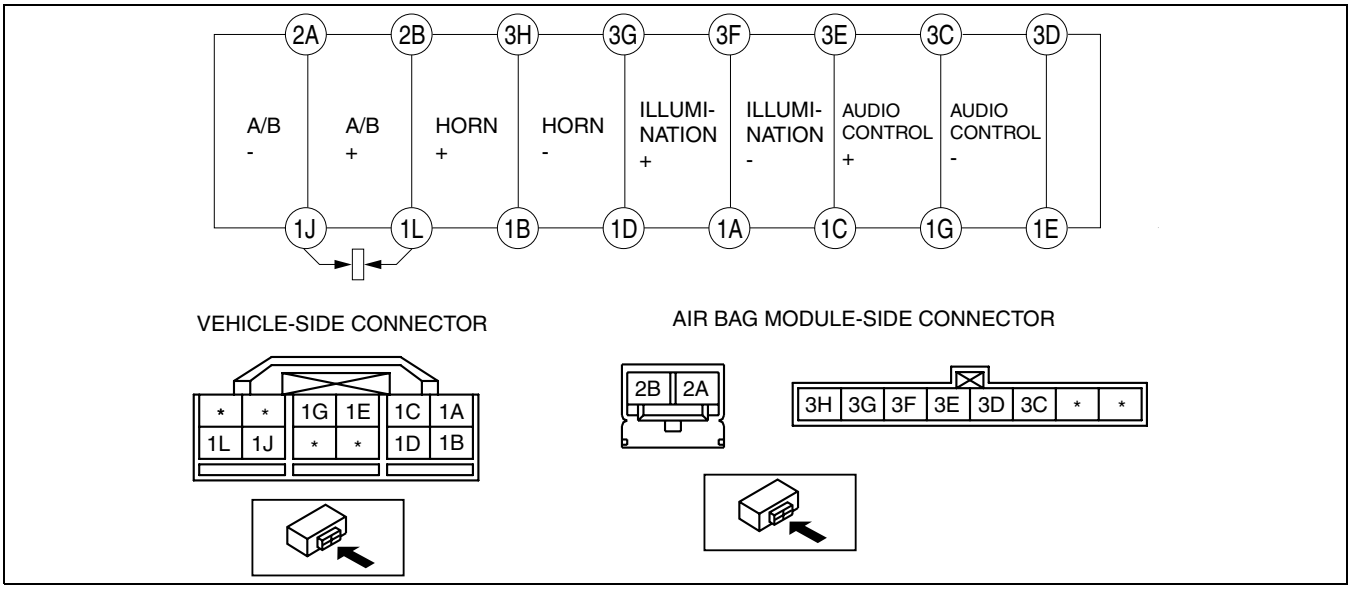

DPE810ZW1019

PASSENGER AIR BAG DEACTIVATION (PAD) SWITCH REMOVAL/INSTALLATION

DPE081064170W01

1. Remove the following parts:
   (1) Front scuff plate inner (driver's side) (See 09–17–19 FRONT SCUFF PLATE REMOVAL/INSTALLATION.)
   (2) Front side trim (driver's side) (See 09–17–15 FRONT SIDE TRIM REMOVAL/INSTALLATION.)
   (3) Side wall (See 09–17–11 SIDE WALL REMOVAL/INSTALLATION.)
   (4) Front console (See 09–17–13 FRONT CONSOLE REMOVAL/INSTALLATION.)
   (5) Bonnet release lever (See 09–14–5 BONNET LATCH AND RELEASE LEVER REMOVAL/INSTALLATION.)
   (6) Lower panel (See 09–17–8 LOWER PANEL REMOVAL/INSTALLATION.)
2. Remove the PAD switch.
3. Install in the reverse order of removal.
4. Turn the ignition switch to the ON position.
5. Verify that the air bag system warning light illuminates for **approx. 6 s** and goes out.
   - If the air bag system warning light does not operate, refer to the on-board diagnostic system (air bag system) and perform inspection of the system.

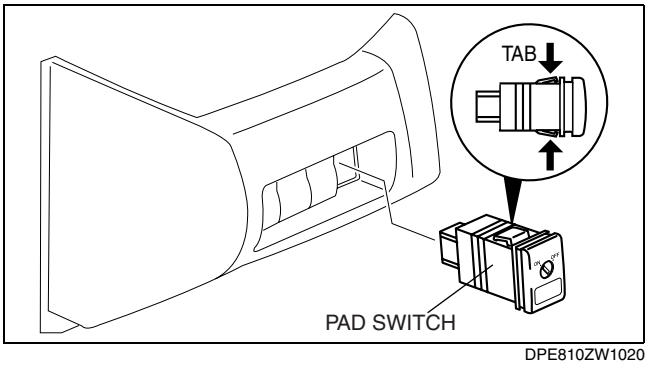

DPE810ZW1020

PASSENGER AIR BAG DEACTIVATION (PAD) SWITCH INSPECTION

DPE081064170W02

1. Remove the PAD switch. (See 08–10–16 PASSENGER AIR BAG DEACTIVATION (PAD) SWITCH REMOVAL/INSTALLATION.)
2. Verify that the continuity between the PAD switch terminals is as indicated in the table.

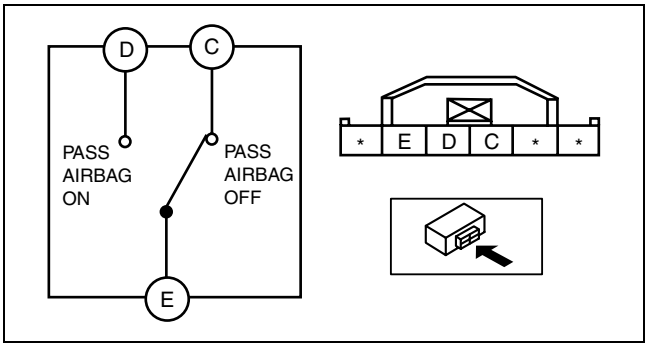

B3E0810W018

- If not as indicated in the table, replace the PAD switch.

○—○ : Continuity

Switch position	Terminal		
	C	D	E
PASS AIRBAG OFF	○		○
PASS AIRBAG ON		○	○

B3E0810W019

PASSENGER AIR BAG DEACTIVATION (PAD) INDICATOR REMOVAL/INSTALLATION

DPE081064170W03

1. Disconnect the negative battery cable.
2. Remove the following parts:
   (1) Front scuff plate inner (See 09–17–19 FRONT SCUFF PLATE REMOVAL/INSTALLATION.)
   (2) Front side trim (See 09–17–15 FRONT SIDE TRIM REMOVAL/INSTALLATION.)
   (3) Side panel (See 09–17–11 SIDE PANEL REMOVAL/INSTALLATION.)
   (4) Side wall (See 09–17–11 SIDE WALL REMOVAL/INSTALLATION.)
   (5) Front console (See 09–17–13 FRONT CONSOLE REMOVAL/INSTALLATION.)
   (6) Glove compartment (See 09–17–7 GLOVE COMPARTMENT REMOVAL/INSTALLATION.)
   (7) Center panel module (vehicles with audio unit) (See 09–20–6 CENTER PANEL MODULE REMOVAL/INSTALLATION.)
   (8) Center panel (vehicles without audio unit) (See 09–17–15 CENTER PANEL REMOVAL/INSTALLATION.)
   (9) LCD unit (vehicles with car-navigation system) (See 09–20–8 LCD UNIT REMOVAL/INSTALLATION.)
   (10) Dashboard center panel (vehicles without car-navigation system) (See 09–17–12 DASHBOARD CENTER PANEL REMOVAL/INSTALLATION.)
   (11) Car-navigation unit (vehicles with car-navigation system) (See 09–20–8 CAR-NAVIGATION UNIT REMOVAL/INSTALLATION.)
   (12) Passenger-side air bag module (See 08–10–6 PASSENGER-SIDE AIR BAG MODULE REMOVAL/INSTALLATION.)
   (13) Dashboard garnish (See 09–17–13 DASHBOARD GARNISH REMOVAL/INSTALLATION.)
3. Remove in the order indicated in the table.

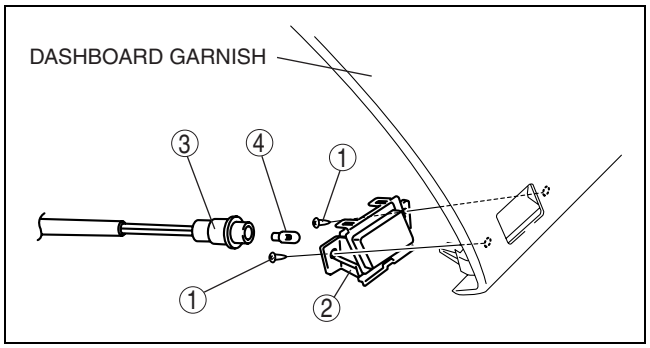

DPE810ZW1022

1	Screw
2	Lens
3	Socket
4	PAD indicator bulb

4. Install in the reverse order of removal.

AIR BAG MODULE AND PRE-TENSIONER SEAT BELT DEPLOYMENT PROCEDURES

DPE081057000W01

Warning

- **A live (undeployed) air bag module or pre-tensioner seat belt may accidentally operate (deploy) when it is disposed of and cause serious injury. Do not dispose of a live (undeployed) air bag module and pre-tensioner seat belt. If the SSTs (Deployment tool and Adapter harness) are not available, consult the nearest Mazda representative for assistance.**

Caution

- **Deploying the air bag modules and pre-tensioner seat belts inside the vehicle may cause damage to the vehicle interior. When the vehicle is not to be scrapped, always deploy the air bag modules and pre-tensioner seat belts outside the vehicle.**

- If the vehicle is to be scrapped, or when disposing of any air bag modules or pre-tensioner seat belts, operate (deploy) them inside the vehicle by following the deployment procedure below and using the **SST** (Deployment

tool).
- When disposing of an operated (deployed) air bag module and pre-tensioner seat belt, refer to “AIR BAG MODULE AND PRE-TENSIONER SEAT BELT DISPOSAL PROCEDURES”.

Deployment Procedure for Inside of Vehicle
1. Inspect the **SST** (Deployment tool). (See 08–10–30 INSPECTION OF SST (DEPLOYMENT TOOL).)
2. Move the vehicle to an open space, away from strong winds, and close all of the vehicle doors and windows.
3. Turn the ignition switch to the LOCK position.
4. Disconnect the negative battery cable and wait for **1 min or more**.
5. Follow the procedure below for operating (deploying) the applicable air bag module or pre-tensioner seat belt.

Driver-side Air Bag Module
1. Remove the driver-side air bag module.
   (See 08–10–5 DRIVER-SIDE AIR BAG MODULE REMOVAL/INSTALLATION.)
2. Connect the **SSTs** (Adapter harness) to the driver-side air bag module as shown in the figure.
3. Install the driver-side air bag module. (See 08–10–5 DRIVER-SIDE AIR BAG MODULE REMOVAL/INSTALLATION.)

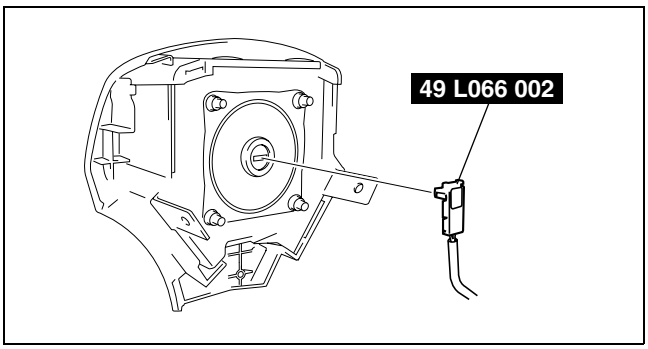

CPJ810ZWB031

4. Connect the **SSTs** (Deployment tool) to the **SSTs** (Adapter harness).
5. Connect the **SSTs** (Deployment tool) to the battery. Connect the power supply red clip to the positive battery terminal, and the black clip to the negative battery terminal.
6. Verify that the red lamp on both **SSTs** (Deployment tool) is illuminated.
7. Verify that all persons are standing **at least 6 m {20 ft}** away from the vehicle.

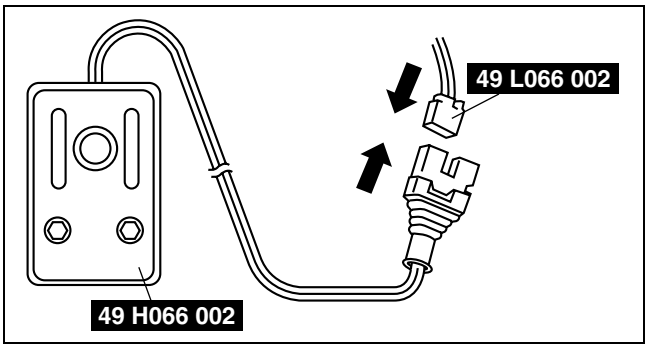

CPJ810ZWB032

8. Press the activation switch on the **SST** (Deployment tool) to operate (deploy) the driver-side air bag module.

   Warning
   - **The air bag module is very hot immediately after it is operated (deployed). You can get burned. Do not touch the air bag module for at least 15 min after deployment.**

9. Disconnect the **SSTs** (Deployment tool) from the **SSTs** (Adapter harness).

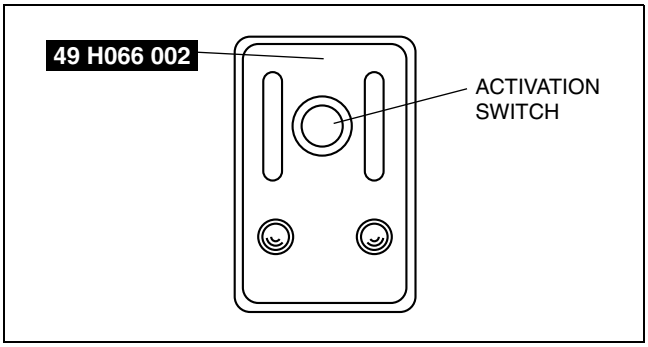

A6E8130W028

Passenger-side Air Bag Module
1. Remove the glove compartment.
   (See 09–17–7 GLOVE COMPARTMENT REMOVAL/INSTALLATION.)
2. Disconnect the passenger-side air bag module connector.

3. Connect the **SSTs** (Adapter harness) to the passenger-side air bag module as shown in the figure.

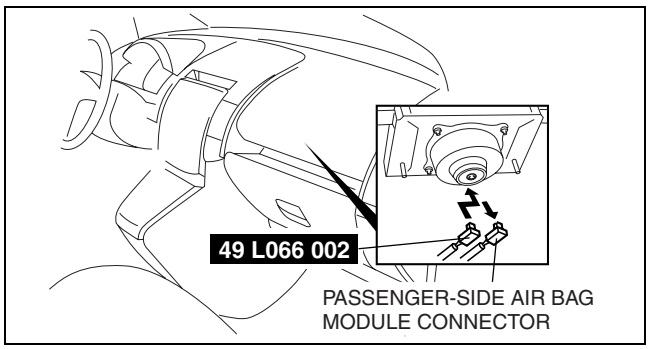

DPE810ZW1023

4. Connect the **SSTs** (Deployment tool) to the **SSTs** (Adapter harness).
5. Connect the **SSTs** (Deployment tool) to the battery. Connect the power supply red clip to the positive battery terminal, and the black clip to the negative battery terminal.
6. Verify that the red lamp on both **SSTs** (Deployment tool) is illuminated.
7. Verify that all persons are standing **at least 6 m {20 ft}** away from the vehicle.

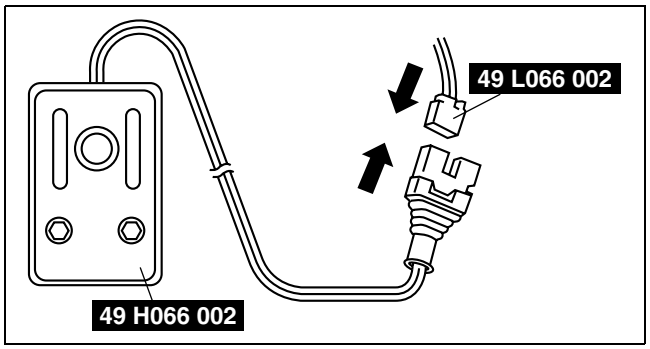

CPJ810ZWB032

8. Press the activation switch on the **SST** (Deployment tool) to operate (deploy) the passenger-side air bag module.

   Warning
   - **The air bag module is very hot immediately after it is operated (deployed). You can be burned. Do not touch the air bag module for at least 15 min after deployment.**

9. Disconnect the **SSTs** (Deployment tool) from the **SSTs** (Adapter harness).

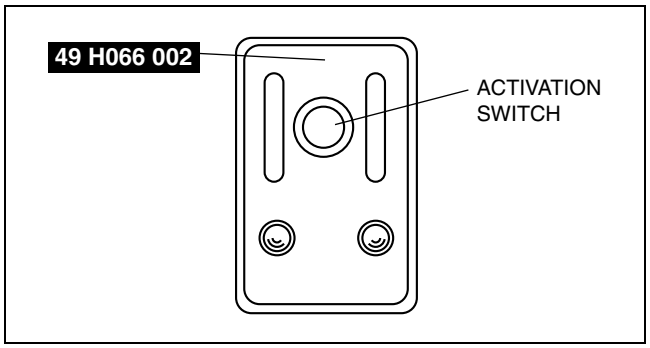

A6E8130W028

Side Air Bag Module

1. Disconnect the front seat connector.
2. Connect the **SST** (Adapter harness) to the side air bag module connector as shown in the figure.

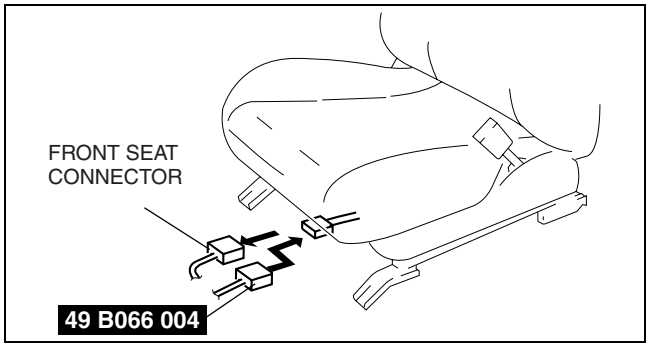

B3E0810W022

3. Connect the **SST** (Deployment tool) to the **SST** (Adapter harness).
4. Connect the **SST** (Deployment tool) to the battery. Connect the power supply red clip to the positive battery terminal, and the black clip to the negative battery terminal.
5. Verify that the red lamp on the **SST** (Deployment tool) is illuminated.
6. Verify that all persons are standing **at least 6 m {20 ft}** away from the vehicle.

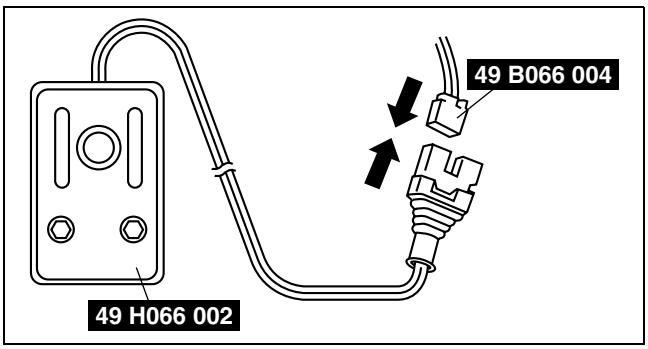

B3E0810W023

7. Press the activation switch on the **SST** (Deployment tool) to operate (deploy) the side air bag module.

   Warning
   - **The air bag module is very hot immediately after it is operated (deployed). You can be burned. Do not touch the air bag module for at least 15 min after deployment.**

8. Disconnect the **SSTs** (Deployment tool) from the **SSTs** (Adapter harness).

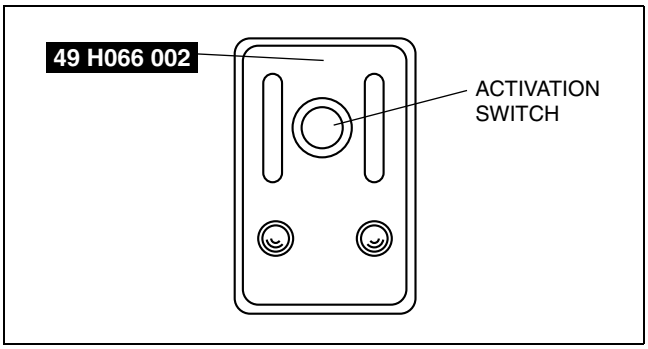

A6E8130W028

Curtain Air Bag Module

1. Remove the C-pillar trim.
   (See 09–17–17 C-PILLAR TRIM REMOVAL/INSTALLATION.)
2. Disconnect the curtain air bag module connector.
3. Connect the **SST** (Adapter harness) to the curtain air bag module as shown in the figure.

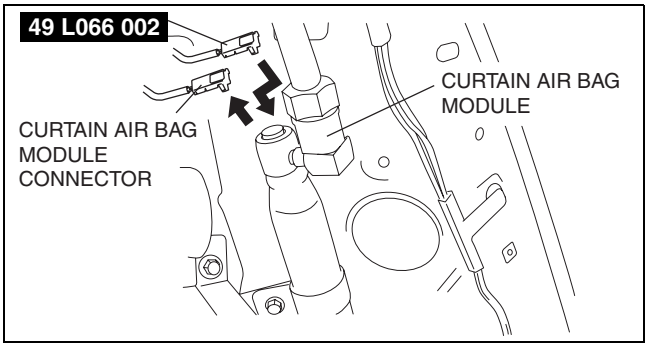

DPE810ZW1024

4. Connect the **SST** (Deployment tool) to the **SST** (Adapter harness).
5. Connect the **SST** (Deployment tool) to the battery. Connect the power supply red clip to the positive battery terminal, and the black clip to the negative battery terminal.
6. Verify that the red lamp on the **SST** (Deployment tool) is illuminated.
7. Verify that all persons are standing **at least 6 m {20 ft}** away from the vehicle.

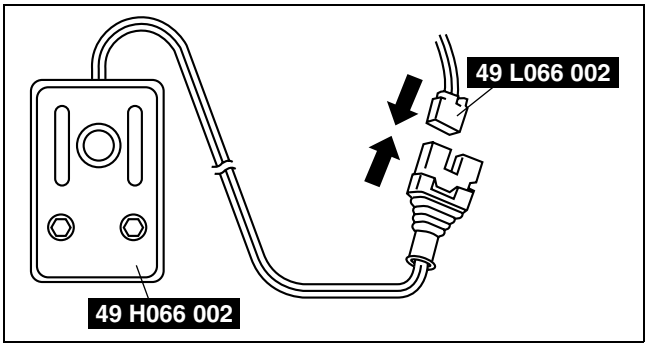

B3E0810W027

8. Press the activation switch on the **SST** (Deployment tool) to operate (deploy) the curtain air bag module.

   Warning
   - **The air bag module is very hot immediately after it is operated (deployed). You can be burned. Do not touch the air bag module for at least 15 min after deployment.**

9. Disconnect the **SSTs** (Deployment tool) from the **SSTs** (Adapter harness).

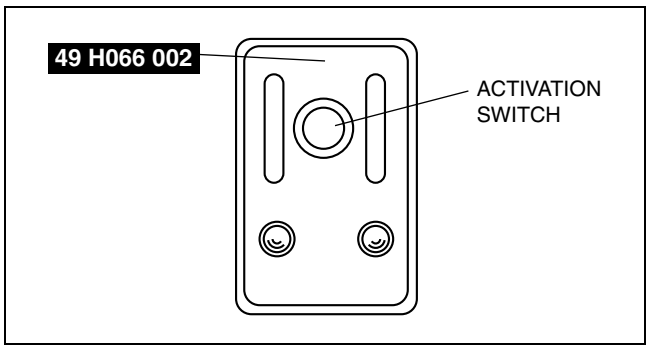

A6E8130W028

Pre-tensioner Seat Belt

1. Remove the B-pillar lower trim.
   (See 09–17–16 B-PILLAR LOWER TRIM REMOVAL/INSTALLATION.)
2. Disconnect the pre-tensioner seat belt connector.
3. Connect the **SST** (Adapter harness) to the pre-tensioner seat belt module as shown in the figure.

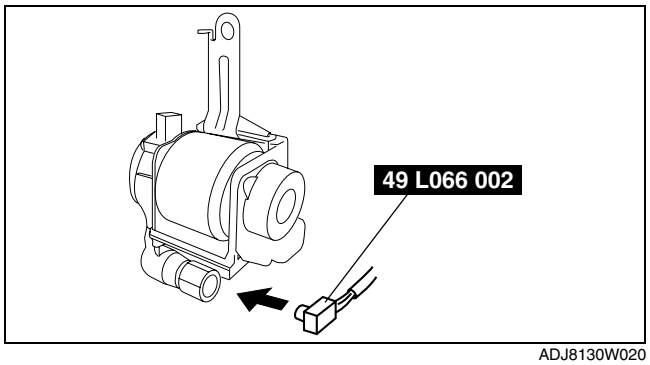

ADJ8130W020

4. Connect the **SST** (Deployment tool) to the **SST** (Adapter harness).
5. Connect the **SST** (Deployment tool) to the battery. Connect the power supply red clip to the positive battery terminal, and the black clip to the negative battery terminal.
6. Verify that the red lamp on the **SST** (Deployment tool) is illuminated.
7. Verify that all persons are standing **at least 6 m {20 ft}** away from the vehicle.

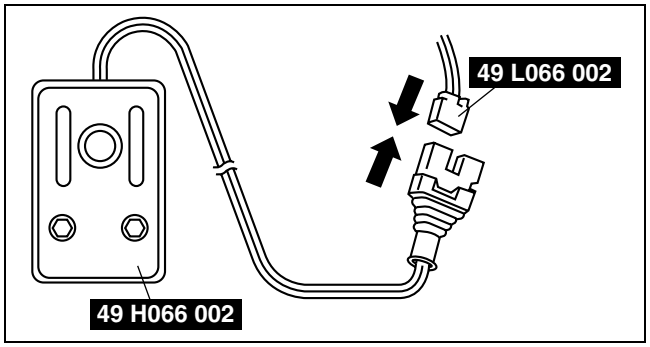

B3E0810W027

8. Press the activation switch on the **SST** (Deployment tool) to operate (deploy) the pre-tensioner seat belt.

   Warning
   - **The air bag module is very hot immediately after it is operated (deployed). You can be burned. Do not touch the air bag module for at least 15 min after deployment.**

9. Disconnect the **SSTs** (Deployment tool) from the **SSTs** (Adapter harness).

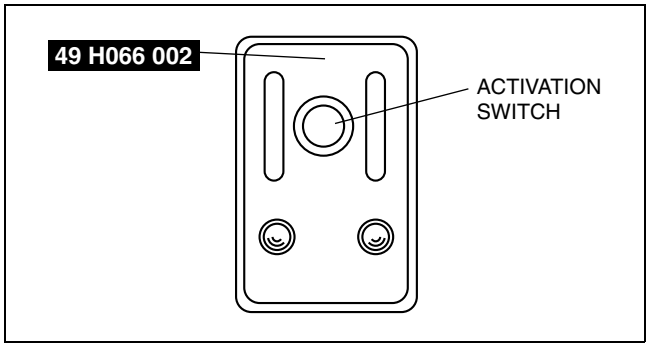

A6E8130W028

Deployment Procedure for Outside of Vehicle

1. Inspect the **SST** (Deployment tool).
   (See 08–10–30 INSPECTION OF SST (DEPLOYMENT TOOL).)
2. Turn the ignition switch to the LOCK position.
3. Disconnect the negative battery cable and wait for **1 min or more**.
4. Follow the procedure below for operating (deploying) the applicable air bag module or pre-tensioner seat belt.

Driver-side Air Bag Module

1. Remove the driver-side air bag module.
   (See 08–10–5 DRIVER-SIDE AIR BAG MODULE REMOVAL/INSTALLATION.)
2. Connect the **SSTs** (Adapter harness) to the driver-side air bag module as shown in the figure.

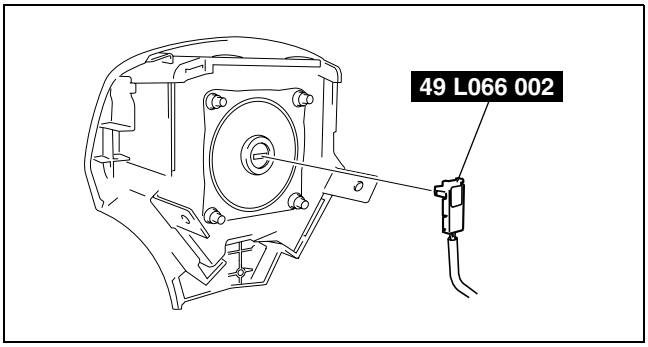

CPJ810ZWB031

3. Place the driver-side air bag module on the center of the tire wheel with the padded surface facing up. To secure the air bag module to the tire wheel, wrap a wire (cross section **1.25 mm^2 {0.002 in^2} or more**) through the wheel and the bolt installation holes of the air bag module **at least 4 times**.

   Warning
   - **If the air bag module is not properly installed to the tire wheel, serious injury may occur when the module is operated (deployed). When installing the air bag module to the tire wheel, make sure the padded surface is facing up.**

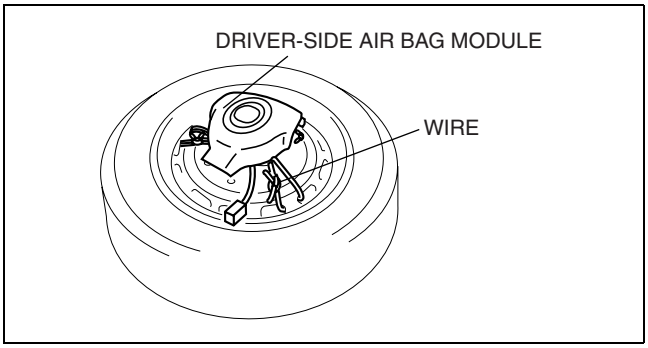

DPE810ZW1025

4. Stack three tires without wheels on top of the tire with the driver-side air bag module, and then stack another tire with a wheel on the very top.

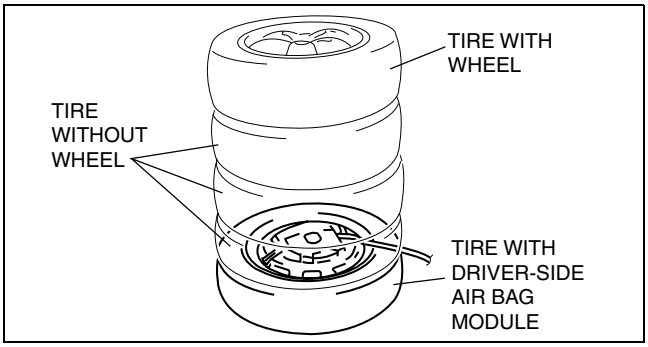

DPE810ZW1036

5. Secure the tires with wire.

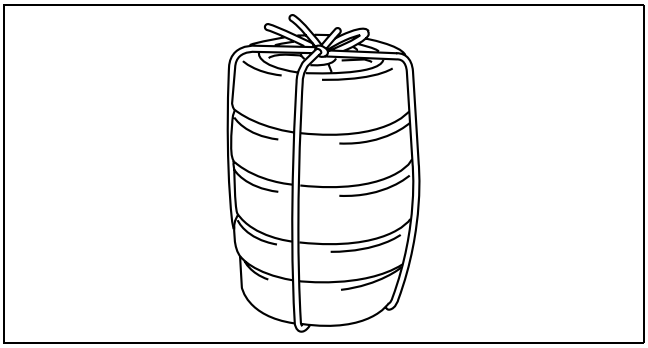

A6E8130W034

6. Connect the **SSTs** (Deployment tool) to the **SSTs** (Adapter harness).
7. Connect the **SSTs** (Deployment tool) to the battery. Connect the power supply red clip to the positive battery terminal, and the black clip to the negative battery terminal.
8. Verify that the red lamp on both **SSTs** (Deployment tool) is illuminated.
9. Verify that all persons are standing **at least 6 m {20 ft}** away from the vehicle.

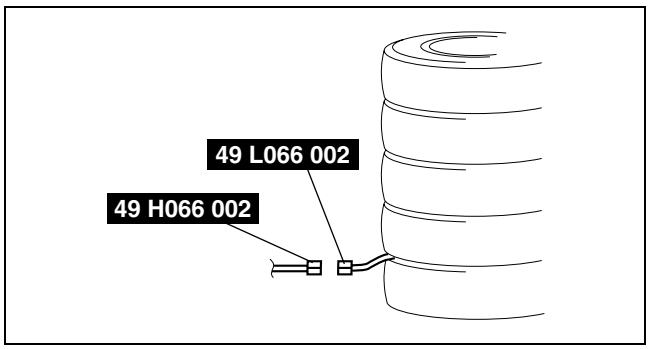

CPJ810ZWB034

10. Press the activation switch on the **SST** (Deployment tool) to operate (deploy) the driver-side air bag module.

    Warning
    - **The air bag module is very hot immediately after it is operated (deployed). You can be burned. Do not touch the air bag module for at least 15 min after deployment.**

11. Disconnect the **SSTs** (Deployment tool) from the **SSTs** (Adapter harness).

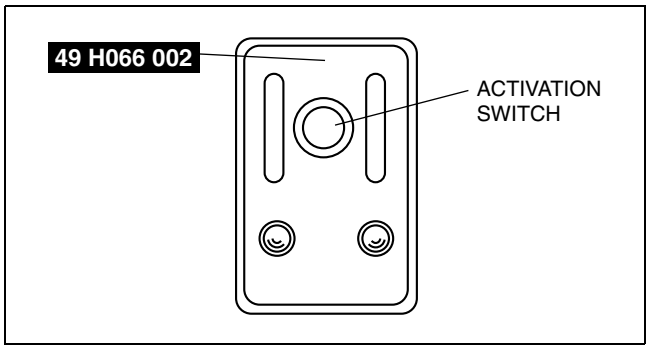

A6E8130W028

Passenger-side Air Bag Module

1. Remove the passenger-side air bag module.
   (See 08–10–6 PASSENGER-SIDE AIR BAG MODULE REMOVAL/INSTALLATION.)
2. Connect the **SSTs** (Adapter harness) to the passenger-side air bag module as shown in the figure.

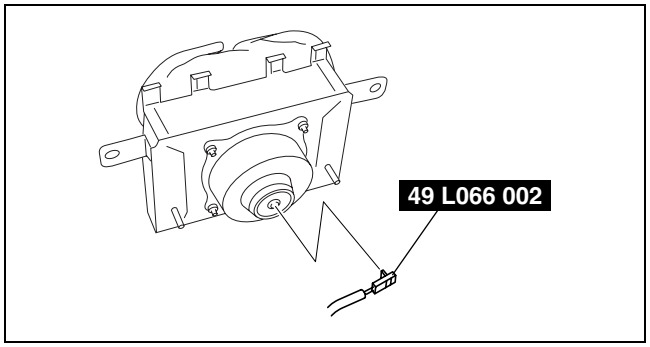

CPJ810ZWB015

3. Place the padded surface of the passenger-side air bag module facing the center of the tire as shown in the figure. To secure the air bag module to the tire wheel, wrap a wire (cross section **1.25 mm^2 {0.002 in^2} or more**) through the tire and the bolt installation holes **at least 4 times** as shown in the figure.

   Warning
   - **If the air bag module is not properly secured to the tire, the tires may fall over by the impact of operation (deployment) and cause serious injury. To prevent this, secure the air bag module properly with the padded surface facing the center of the tire.**

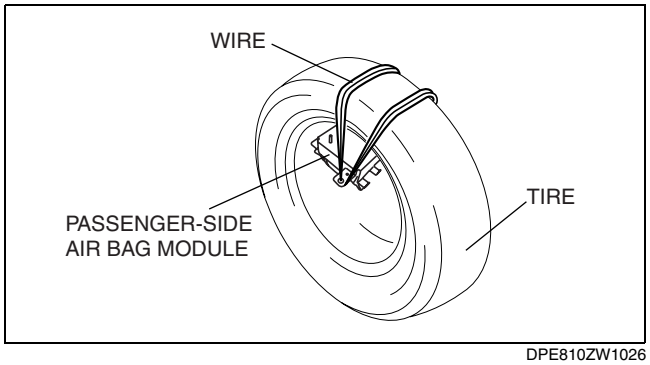

DPE810ZW1026

4. Stack the tire with the passenger-side air bag module on top of two tires without wheels. Stack a tire without a wheel on top of the tire with the passenger-side air bag module, and then stack another tire with a wheel on the very top.

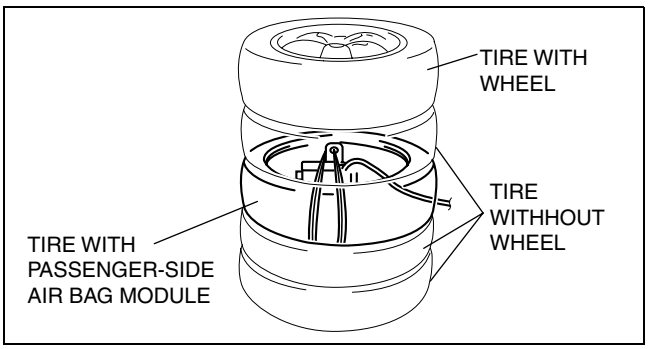

DPE810ZW1027

5. Secure the tires with wire.

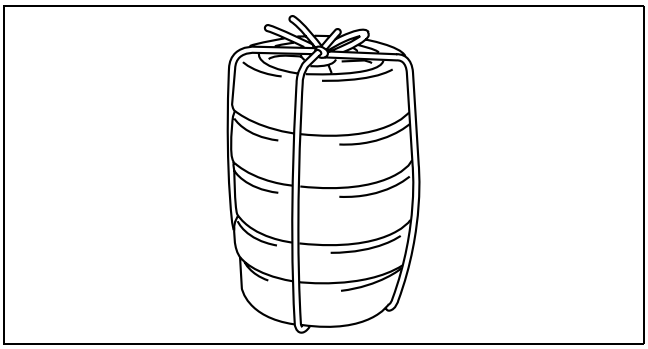

A6E8130W034

6. Connect the **SSTs** (Deployment tool) to the **SSTs** (Adapter harness).
7. Connect the **SSTs** (Deployment tool) to the battery. Connect the power supply red clip to the positive battery terminal, and the black clip to the negative battery terminal.
8. Verify that the red lamp on both **SSTs** (Deployment tool) is illuminated.
9. Verify that all persons are standing **at least 6 m {20 ft}** away from the vehicle.

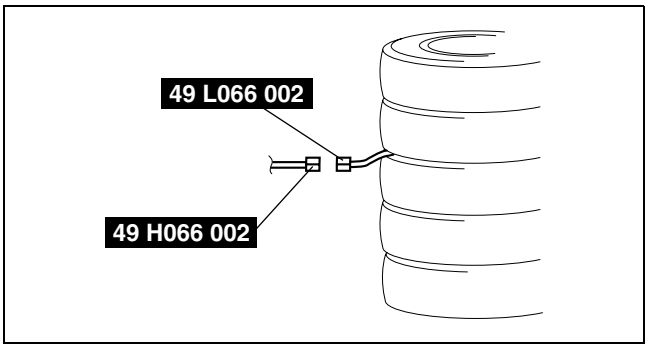

CPJ810ZWB038

10. Press the activation switch on the **SST** (Deployment tool) to operate (deploy) the passenger-side air bag module.

    Warning
    - **The air bag module is very hot immediately after it is operated (deployed). You can be burned. Do not touch the air bag module for at least 15 min after deployment.**

11. Disconnect the **SSTs** (Deployment tool) from the **SSTs** (Adapter harness).

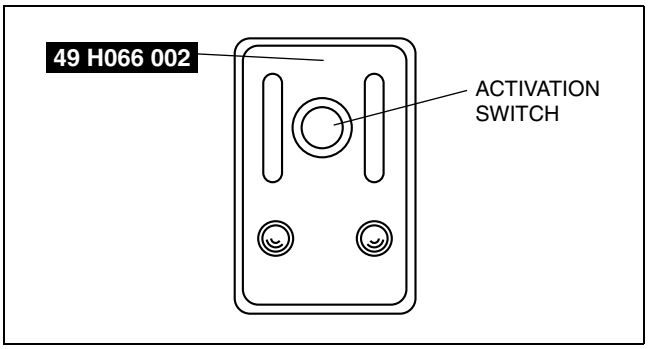

A6E8130W028

Side Air Bag Module

1. Remove the side air bag module.
   (See 08–10–7 SIDE AIR BAG MODULE REMOVAL/INSTALLATION.)

2. Install the nuts to the side air bag module as shown in the figure, and connect the SST (Adapter harness).

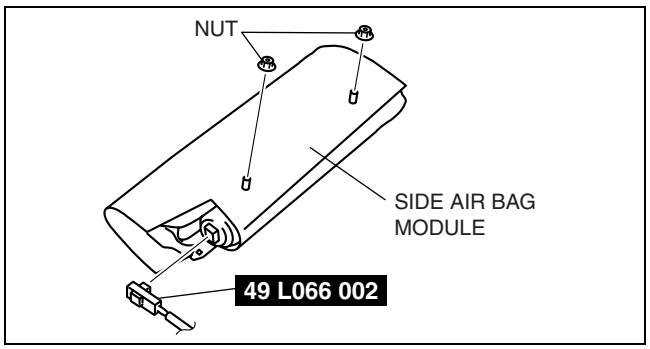

DPE810ZW1028

3. Place the padded surface of the side air bag module facing the center of the tire as shown in the figure. To secure the air bag module to the tire wheel, wrap a wire (cross section **1.25 mm^2 {0.002 in^2} or more**) through the tire and around the bolts **at least 4 times**.

   Warning
   - **If the air bag module is not properly secured to the tire, the tires may fall over by the impact of operation (deployment) and cause serious injury. To prevent this, secure the air bag module properly with the padded surface facing the center of the tire.**

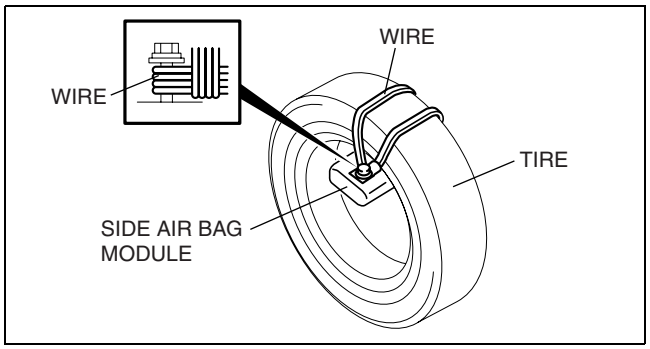

B3E0810W036

4. Stack the tire with the side air bag module on top of two tires without wheels. Stack a tire without a wheel on top of the tire with the side air bag module, and then stack another tire with a wheel on the very top.

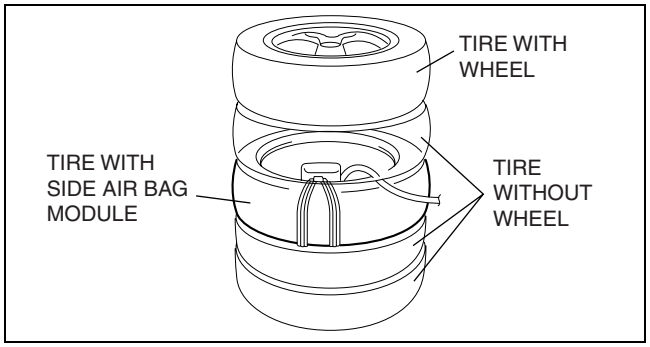

DPE810ZW1037

5. Secure the tires with wire.

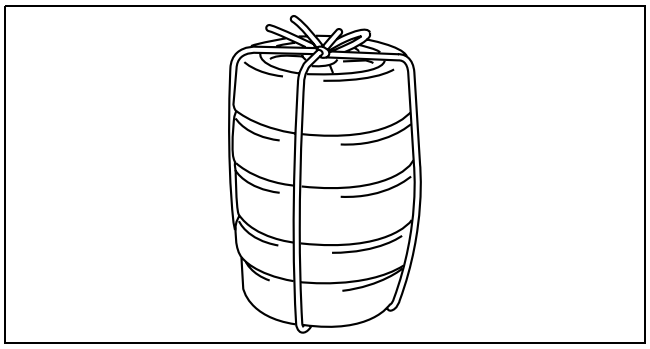

A6E8130W034

6. Connect the **SST** (Deployment tool) to the **SST** (Adapter harness).
7. Connect the **SST** (Deployment tool) to the battery. Connect the power supply red clip to the positive battery terminal, and the black clip to the negative battery terminal.
8. Verify that the red lamp on the **SST** (Deployment tool) is illuminated.
9. Verify that all persons are standing **at least 6 m {20 ft}** away from the vehicle.

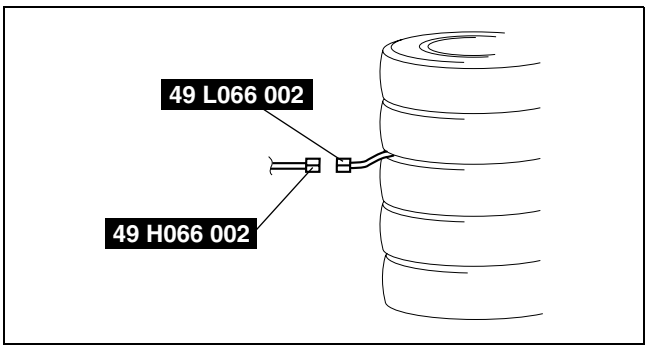

CPJ810ZWB038

10. Press the activation switch on the **SST** (Deployment tool) to operate (deploy) the side air bag module.

    Warning
    - **The air bag module is very hot immediately after it is operated (deployed). You can be burned. Do not touch the air bag module for at least 15 min after deployment.**

11. Disconnect the **SSTs** (Deployment tool) from the **SSTs** (Adapter harness).

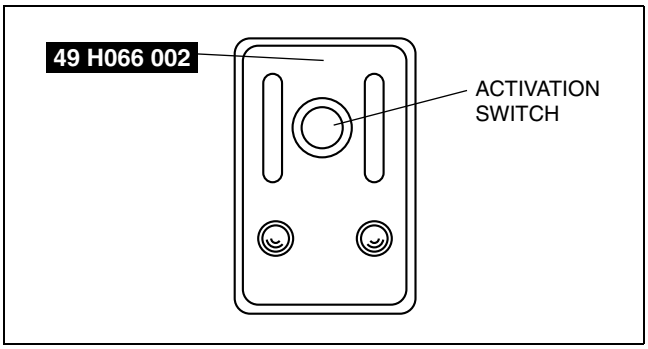

A6E8130W028

Curtain Air Bag Module

1. Remove the curtain air bag module.
   (See 08–10–8 CURTAIN AIR BAG MODULE REMOVAL/INSTALLATION.)
2. Secure the curtain air bag module in a vise, and cut off the deployment section, as shown in the figure.

   Warning
   - **Be sure not to crush the pipe on the side where it is cut. If it is crushed completely, the interior pressure of the pipe will build up and can cause it to explode during air bag module operation (deployment).**

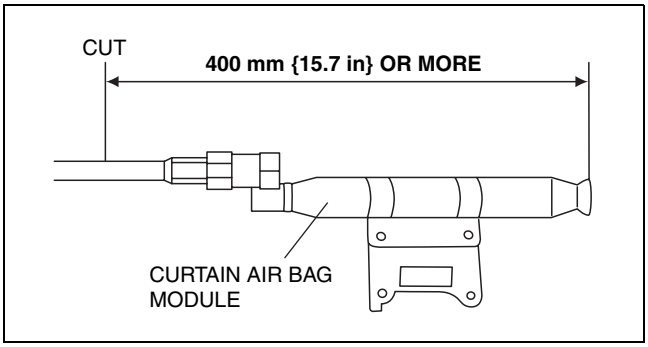

DPE810ZW1029

3. Connect the **SST** (Adapter harness) to the curtain air bag module as shown in the figure.

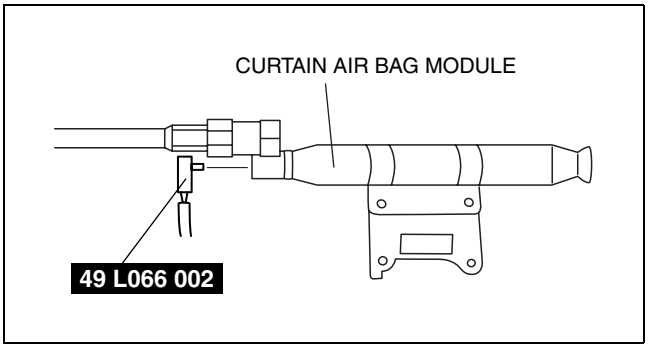

DPE810ZW1030

4. Secure the curtain air bag module to the tire, by wrapping a wire (cross section **1.25 mm^2 {0.002 in^2} or more**) through the tire and the bolt installation holes **at least 4 times** as shown in the figure.

   Warning
   - **If the air bag module is not properly secured to the tire, the tires may fall over by the impact of operation (deployment) and cause serious injury. To prevent this, secure the air bag module properly with the padded surface facing the center of the tire.**

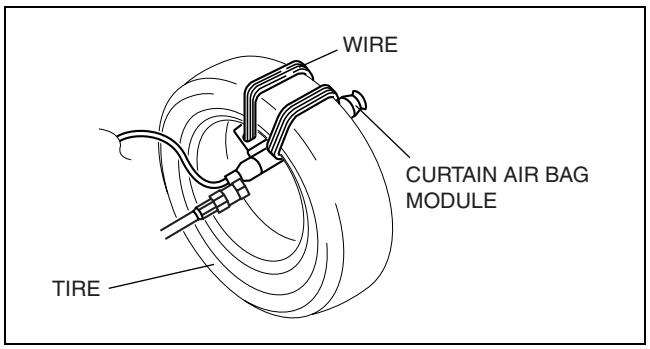

DPE810ZW1031

5. Stack the tire with the curtain air bag module on top of two tires without wheels. Stack a tire without a wheel on top of the tire with the curtain air bag module, and then stack another tire with a wheel on the very top.

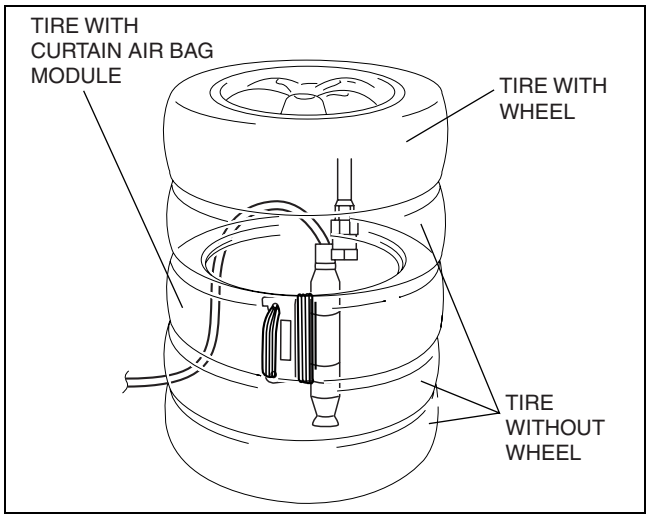

DPE810ZW1032

6. Secure the tires with wire.

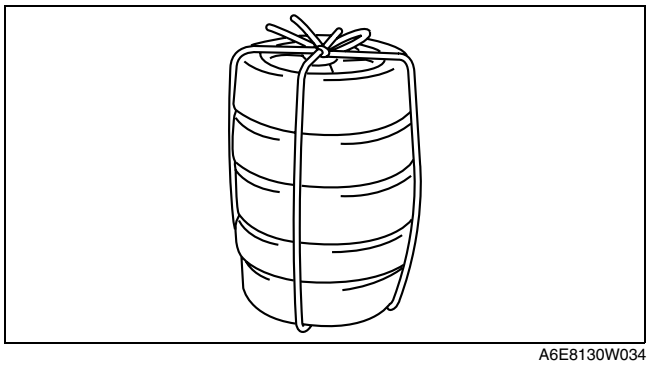
A6E8130W034

7. Connect the **SST** (Deployment tool) to the **SST** (Adapter harness).
8. Connect the **SST** (Deployment tool) to the battery. Connect the power supply red clip to the positive battery terminal, and the black clip to the negative battery terminal.
9. Verify that the red lamp on the **SST** (Deployment tool) is illuminated.
10. Verify that all persons are standing **at least 6 m {20 ft}** away from the vehicle.

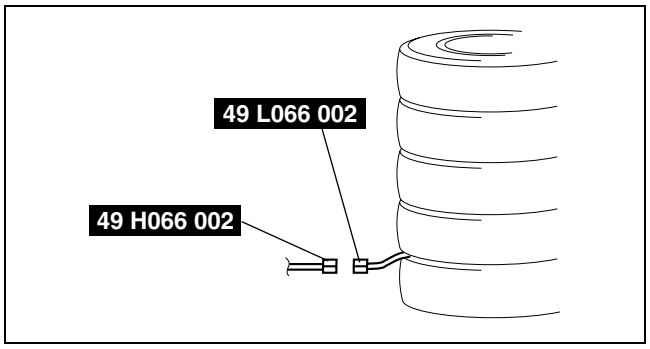

B3E0810W904

11. Press the activation switch on the **SST** (Deployment tool) to operate (deploy) the curtain air bag module.

    Warning
    - **The air bag module is very hot immediately after it is operated (deployed). You can be burned. Do not touch the air bag module for at least 15 min after deployment.**

12. Disconnect the **SSTs** (Deployment tool) from the **SSTs** (Adapter harness).

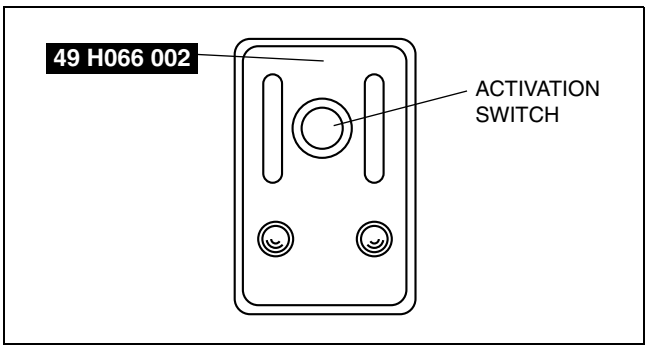

A6E8130W028

Pre-tensioner Seat Belt

1. Remove the pre-tensioner seat belt.
   (See 08–11–1 FRONT SEAT BELT REMOVAL/INSTALLATION.)
2. Connect the **SST** (Adapter harness) to the pre-tensioner seat belt as shown in the figure.

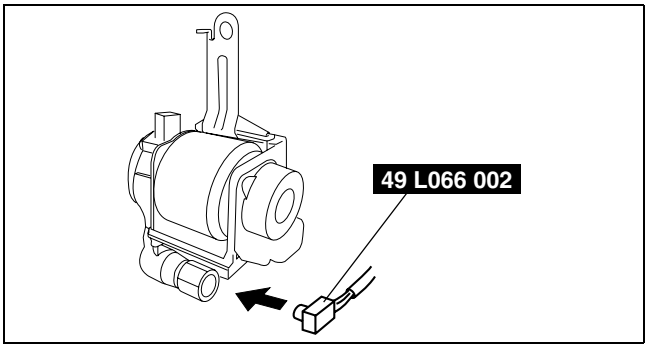

ADJ8130W020

3. Place the pre-tensioner seat belt on the center of the tire wheel with the padded surface facing up. To secure the pre-tensioner seat belt to the tire wheel, wrap a wire (cross section **1.25 mm^2 {0.002 in^2} or more**) through the wheel and the bolt installation holes of the pre-tensioner seat belt **at least 4 times**.

   Warning
   - **If the pre-tensioner seat belt is not properly secured to the tire, serious injury may occur when the pre-tensioner part is deployed. When installing the pre-tensioner seat belt to the tire, make sure the pre-tensioner part is inside the tire.**

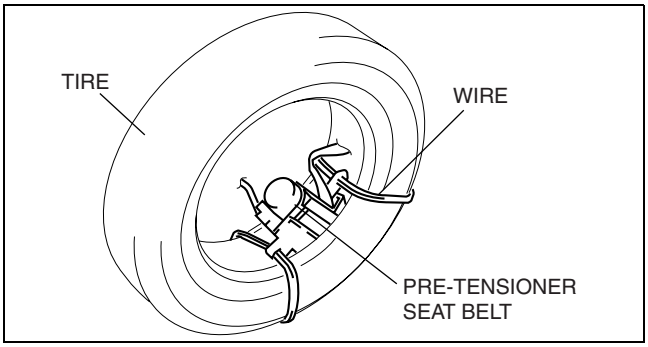

DPE810ZW1033

4. Stack the tire with the pre-tensioner seat belt on top of two tires without wheels. Stack a tire without a wheel on top of the tire with the pre-tensioner seat belt, and then stack another tire with a wheel on the very top.

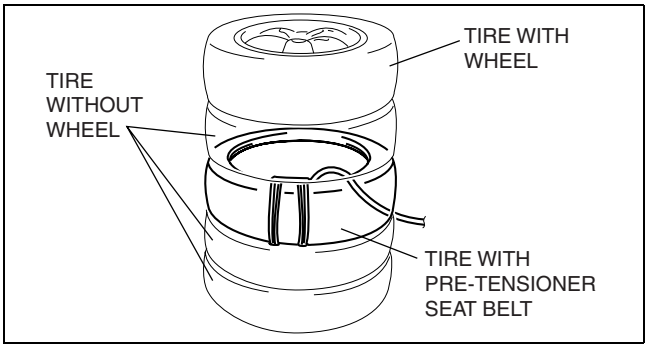

DPE810ZW1034

5. Secure the tires with wire.

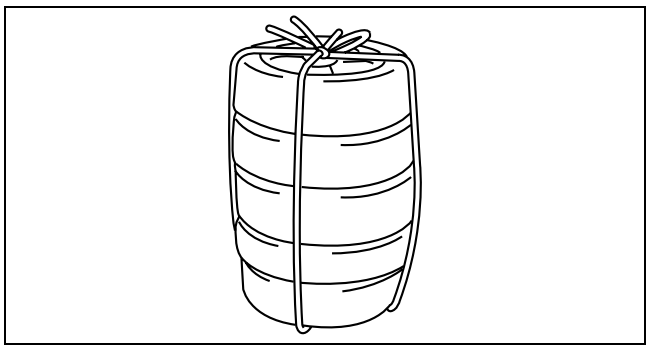

A6E8130W034

6. Connect the **SST** (Deployment tool) to the **SST** (Adapter harness).
7. Connect the **SST** (Deployment tool) to the battery. Connect the power supply red clip to the positive battery terminal, and the black clip to the negative battery terminal.
8. Verify that the red lamp on the **SST** (Deployment tool) is illuminated.
9. Verify that all persons are standing **at least 6 m {20 ft}** away from the vehicle.

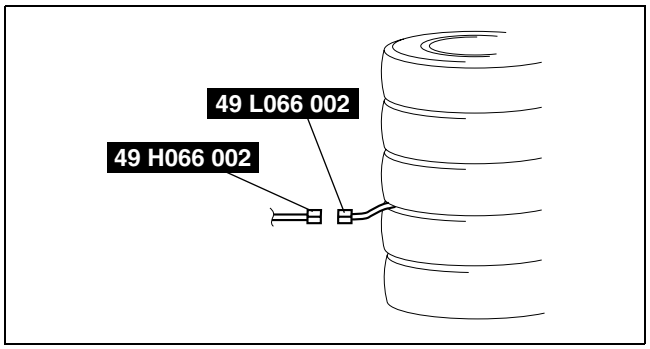

DPE810ZW1035

10. Press the activation switch on the **SST** (Deployment tool) to operate (deploy) the pre-tensioner seat belt.

    Warning
    - **The air bag module is very hot immediately after it is operated (deployed). You can be burned. Do not touch the air bag module for at least 15 min after deployment.**

11. Disconnect the **SSTs** (Deployment tool) from the **SSTs** (Adapter harness).

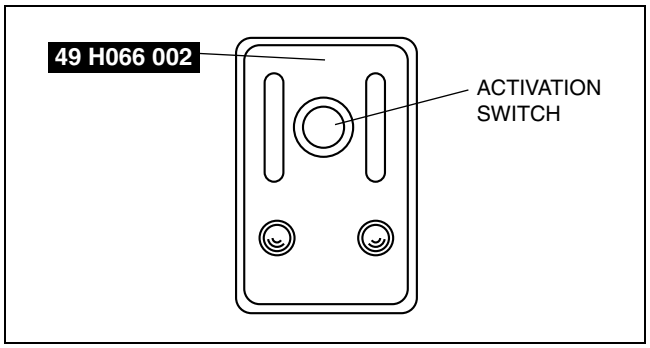

A6E8130W028

AIR BAG MODULE AND PRE-TENSIONER SEAT BELT DISPOSAL PROCEDURES

DPE081057000W02

Warning
- **A live (undeployed) air bag module or pre-tensioner seat belt may accidentally operate (deploy) when it is disposed of and cause serious injury. Always refer to the "AIR BAG MODULE AND PRE-TENSIONER SEAT BELT DEPLOYMENT PROCEDURES" and dispose of air bag modules and pre-tensioner seat belts in a deployed condition.**
- **The air bag modules and the pre-tensioner seat belts are very hot immediately after they are deployed. You can be burned. Do not touch an air bag module and pre-tensioner seat belt for at least 15 min after deployment.**
- **Pouring water on the deployed air bag module and pre-tensioner seat belt is dangerous. The water will mix with the residual gases to form a gas that can make breathing difficult. Do not pour water on the deployed air bag module and pre-tensioner seat belt.**
- **The deployed air bag module or pre-tensioner seat belt may contain deposits of sodium hydroxide, a caustic byproduct of the gas-generated combustion. If this substance gets into your eyes or on your hands, it can cause irritation and itching. When handling the deployed air bag module and pre-tensioner seat belt, wear gloves and safety glasses.**

1. Remove the deployed air bag module or pre-tensioner seat belt.

2. Put the air bag module or pre-tensioner seat belt in a plastic bag, seal the bag, and then dispose of it.

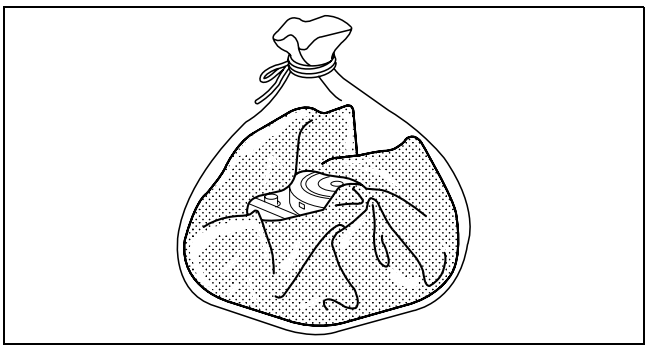

BHJ0810W023

INSPECTION OF SST (DEPLOYMENT TOOL)

1. Before using the **SST** (49 H066 002), inspect its operation.

DPE081001078W01

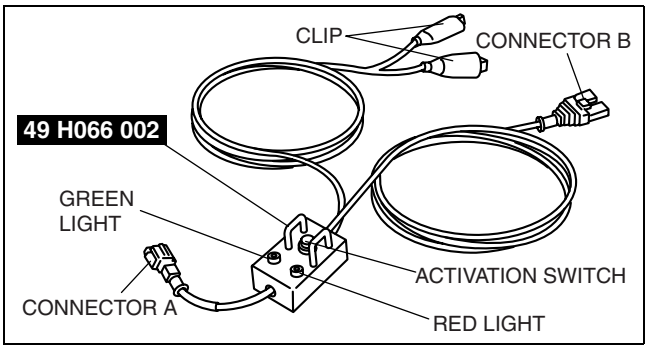

CHU0810W012

Inspection Procedure

1. Follow the steps below to inspect the **SST** (49 H066 002).
   - If not as indicated in the table, replace the **SST** (49 H066 002) because it has a malfunction.

Warning

- **Do not use a malfunctioning SST (49 H066 002), otherwise it could cause the air bag module or pre-tensioner seat belt to accidentally operate (deploy).**

Caution

- **Because the permissible voltage for the SST (49 H066 002) is 12 V, do not connect a 24 V power source because it will damage the SST. Always connect only a 12 V power source.**

Step	Inspection procedure	Light condition	
		Green	Red
1	Connect the power supply red clip to the positive battery terminal, and the black clip to the negative battery terminal.	On	Off
2	Connect connectors A and B.	Off	On
3	Press the activation switch.	On	Off

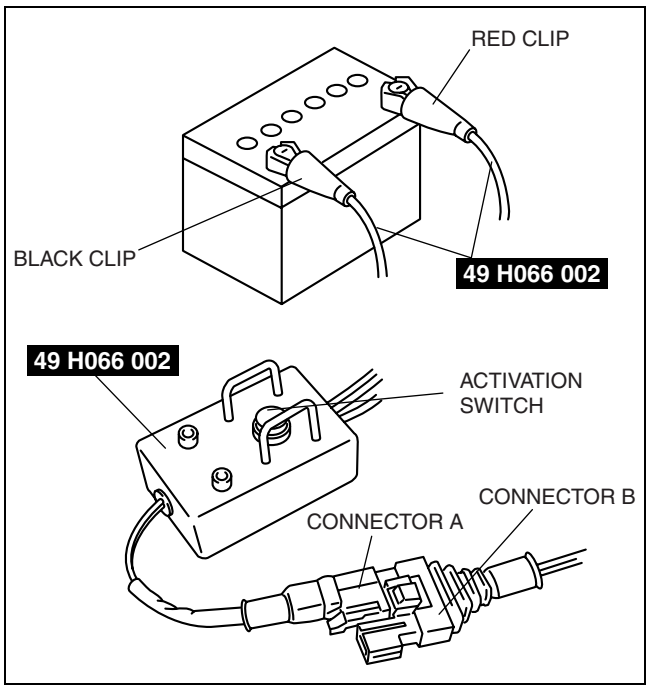

CHU0810W013

08–11 SEAT BELT

LOCATION INDEX. 08–11–1
FRONT SEAT BELT REMOVAL/ INSTALLATION 08–11–1
ADJUSTER ANCHOR REMOVAL/ INSTALLATION 08–11–2
SECOND-ROW SEAT BELT REMOVAL/ INSTALLATION 08–11–3
SECOND-ROW CENTER SEAT BELT REMOVAL/ INSTALLATION 08–11–4
THIRD-ROW SEAT BELT REMOVAL/INSTALLATION 08–11–5
FRONT BUCKLE REMOVAL/ INSTALLATION. 08–11–5
SECOND-ROW BUCKLE REMOVAL/INSTALLATION 08–11–6
SECOND-ROW CENTER BUCKLE REMOVAL/ INSTALLATION. 08–11–6
THIRD-ROW BUCKLE REMOVAL/ INSTALLATION. 08–11–7
SEAT BELT INSPECTION 08–11–7

LOCATION INDEX

DPE081157000W01

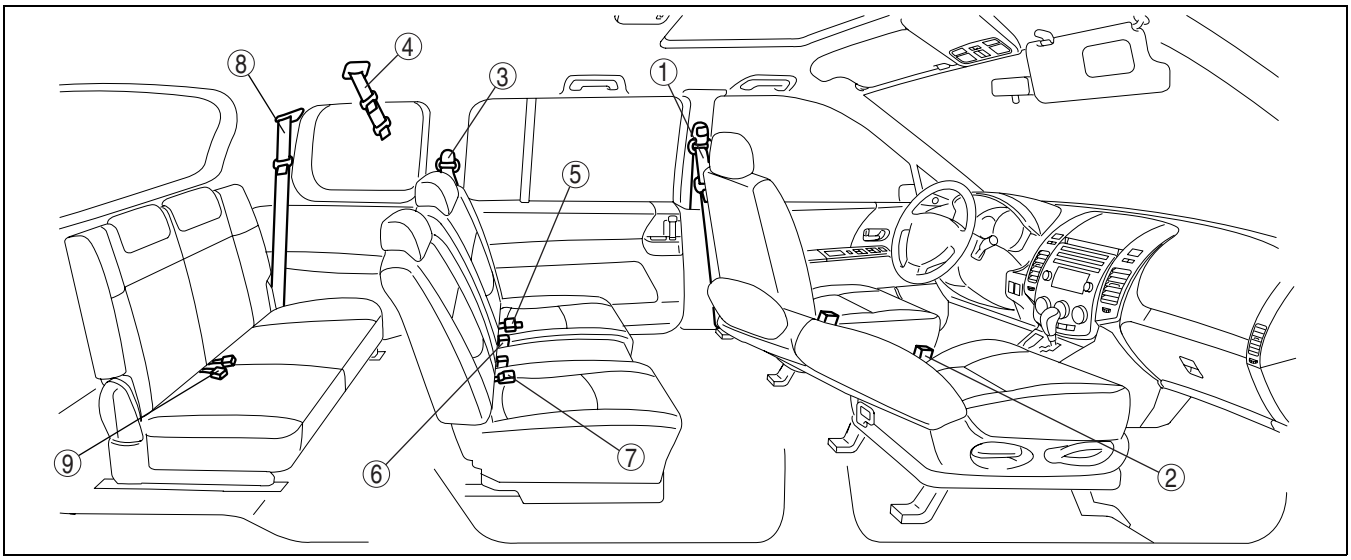

DPE811ZT1001

1	Front seat belt (See 08–11–1 FRONT SEAT BELT REMOVAL/ INSTALLATION.) (See 08–11–7 SEAT BELT INSPECTION.)
2	Front buckle (See 08–11–5 FRONT BUCKLE REMOVAL/ INSTALLATION.)
3	Second-row seat belt (See 08–11–3 SECOND-ROW SEAT BELT REMOVAL/INSTALLATION.) (See 08–11–7 SEAT BELT INSPECTION.)
4	Second-row center seat belt (Type A) (See 08–11–4 SECOND-ROW CENTER SEAT BELT REMOVAL/INSTALLATION.) (See 08–11–7 SEAT BELT INSPECTION.)

5	Second-row center seat belt (Type B) (See 08–11–4 SECOND-ROW CENTER SEAT BELT REMOVAL/INSTALLATION.) (See 08–11–7 SEAT BELT INSPECTION.)
6	Second-row buckle (See 08–11–6 SECOND-ROW BUCKLE REMOVAL/INSTALLATION.)
7	Second-row center buckle (See 08–11–6 SECOND-ROW CENTER BUCKLE REMOVAL/INSTALLATION.)
8	Third-row seat belt (See 08–11–5 THIRD-ROW SEAT BELT REMOVAL/ INSTALLATION.) (See 08–11–7 SEAT BELT INSPECTION.)
9	Third-row buckle (See 08–11–7 THIRD-ROW BUCKLE REMOVAL/ INSTALLATION.)

FRONT SEAT BELT REMOVAL/INSTALLATION

DPE081157630W01

Warning

- **Handling the front seat belt (pre-tensioner seat belt) improperly can accidentally deploy the pre-tensioner seat belt, which may seriously injure you. Read the service warnings and cautions before handling the front seat belt (pre-tensioner seat belt). (See 08–10–2 SERVICE WARNINGS.)**

(See 08–10–4 SERVICE CAUTIONS.)

Warning

- **The side air bag sensor is attached to the lower part of the B-pillar. When working around the B-pillar, disconnect the negative battery cable or work carefully, avoiding excessive impact to the lower part of the B-pillar.**

Caution

- **The ELR (emergency locking retractor) has a spring that will unwind if the retractor cover is removed. The spring cannot be rewound by hand. If this occurs, the ELR will not work properly. Therefore, do not disassemble the retractor.**

1. Turn the ignition switch to the LOCK position.
2. Disconnect the negative battery cable.
3. Remove the front scuff plate inner. (See 09–17–19 FRONT SCUFF PLATE REMOVAL/INSTALLATION.)
4. Remove the rear scuff plate. (See 09–17–19 REAR SCUFF PLATE REMOVAL/INSTALLATION.)
5. Remove the B-pillar lower trim. (See 09–17–16 B-PILLAR LOWER TRIM REMOVAL/INSTALLATION.)
6. Remove the cover.
7. Remove the bolt A and bolt B , then remove the front seat belt.

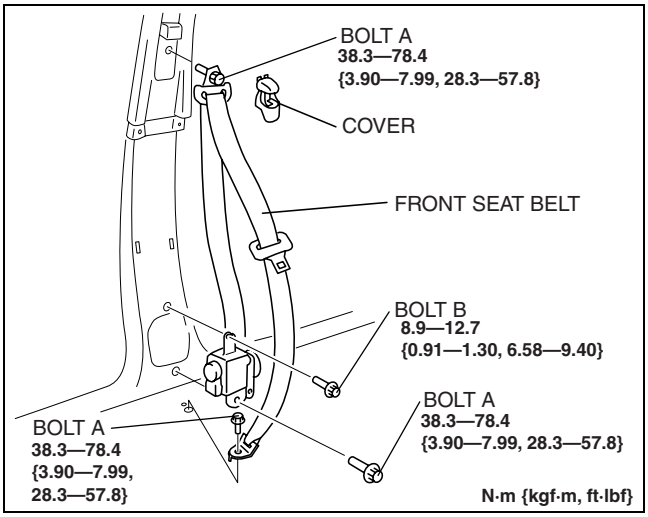

DPE811ZW1002

8. Using a screwdriver, pry out the pre-tensioner seat belt connector's stopper plate.
9. Disconnect the pre-tensioner seat belt connector.
10. Install in the reverse order of removal.
11. Turn the ignition switch to the ON position.
12. Verify that the air bag system warning light illuminates for **approx. 6 s** and goes out.
    - If the air bag system warning light does not operate, refer to the on-board diagnostic system (air bag system) and perform inspection of the system.

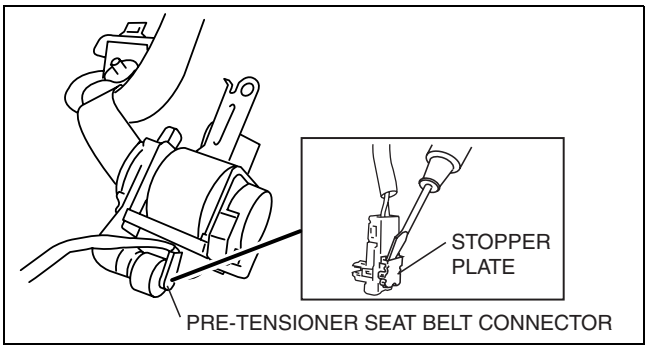

DPE811ZW1003

ADJUSTER ANCHOR REMOVAL/INSTALLATION

DPE081157630W02

Warning

- **The side air bag sensor is attached to the lower part of the B-pillar. When working around the B-pillar, disconnect the negative battery cable or work carefully, avoiding excessive impact to the lower part of the B-pillar.**

1. Turn the ignition switch to the LOCK position.
2. Disconnect the negative battery cable.
3. Remove the following parts:
   (1) Front scuff plate inner (See 09–17–19 FRONT SCUFF PLATE REMOVAL/INSTALLATION.)
   (2) Rear scuff plate (See 09–17–19 REAR SCUFF PLATE REMOVAL/INSTALLATION.)
   (3) B-pillar lower trim (See 09–17–16 B-PILLAR LOWER TRIM REMOVAL/INSTALLATION.)
   (4) Front seat belt upper anchor installation bolt (See 08–11–1 FRONT SEAT BELT REMOVAL/INSTALLATION.)
   (5) B-pillar upper trim (See 09–17–16 B-PILLAR UPPER TRIM REMOVAL/INSTALLATION.)

4. Remove in the order indicated in the table.

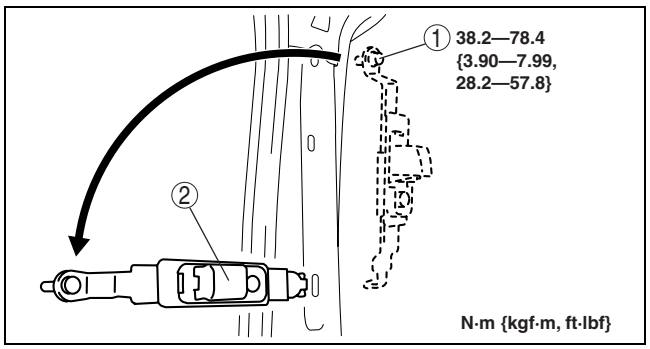

DPE811ZW1004

1	Bolt
2	Adjuster anchor

5. Install in the reverse order of removal.

SECOND-ROW SEAT BELT REMOVAL/INSTALLATION

DPE081157830W01

Caution

- **The ELR (emergency locking retractor) has a spring that will unwind if the retractor cover is removed. The spring cannot be rewound by hand. If this occurs, the ELR will not work properly. Therefore, do not disassemble the retractor.**

1. Remove the following parts:
   (1) Rear package tray lid (See 09–17–20 REAR PACKAGE TRAY LID REMOVAL/INSTALLATION.)
   (2) Third-row seat (See 09–13–8 THIRD-ROW SEAT REMOVAL/INSTALLATION.)
   (3) Rear scuff plate (See 09–17–19 REAR SCUFF PLATE REMOVAL/INSTALLATION.)
   (4) Trunk end trim (See 09–17–20 TRUNK END TRIM REMOVAL/INSTALLATION.)
   (5) Third-row seat belt lower anchor installation bolt (See 08–11–5 THIRD-ROW SEAT BELT REMOVAL/INSTALLATION.)
   (6) Trunk side trim (See 09–17–19 TRUNK SIDE TRIM REMOVAL/INSTALLATION.)
2. Remove in the order indicated in the table.

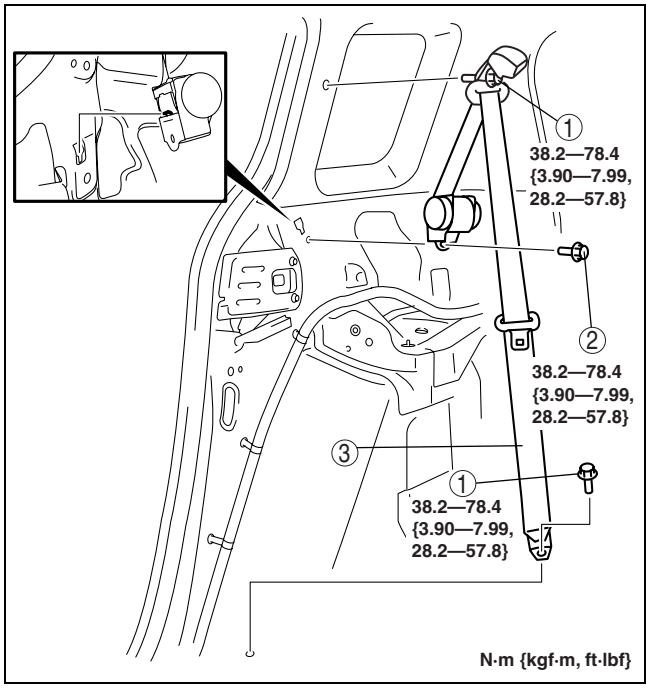

DPE811ZW1005

1	Bolt A
2	Bolt B
3	Second-row seat belt

3. Install in the reverse order of removal.

SECOND-ROW CENTER SEAT BELT REMOVAL/INSTALLATION

DPE081157830W02

Caution

- **The ELR (emergency locking retractor) has a spring that will unwind if the retractor cover is removed. The spring cannot be rewound by hand. If this occurs, the ELR will not work properly. Therefore, do not disassemble the retractor.**

Type A

1. Remove the following parts:
   (1) A-pillar trim (See 09–17–15 A-PILLAR TRIM REMOVAL/INSTALLATION.)
   (2) Front scuff plate inner (See 09–17–19 FRONT SCUFF PLATE REMOVAL/INSTALLATION.)
   (3) Rear scuff plate (See 09–17–19 REAR SCUFF PLATE REMOVAL/INSTALLATION.)
   (4) B-pillar lower trim (See 09–17–16 B-PILLAR LOWER TRIM REMOVAL/INSTALLATION.)
   (5) Front seat belt upper anchor installation bolt (See 08–11–1 FRONT SEAT BELT REMOVAL/INSTALLATION.)
   (6) B-pillar upper trim (See 09–17–16 B-PILLAR UPPER TRIM REMOVAL/INSTALLATION.)
   (7) Rear package tray lid (See 09–17–20 REAR PACKAGE TRAY LID REMOVAL/INSTALLATION.)
   (8) Sub-trunk
   (9) Third-row seat (See 09–13–8 THIRD-ROW SEAT REMOVAL/INSTALLATION.)
   (10) Rear header trim (See 09–17–20 REAR HEADER TRIM REMOVAL/INSTALLATION.)
   (11) Trunk end trim (See 09–17–20 TRUNK END TRIM REMOVAL/INSTALLATION.)
   (12) Third-row seat belt lower anchor installation bolt (See 08–11–5 THIRD-ROW SEAT BELT REMOVAL/INSTALLATION.)
   (13) Cargo compartment light (See 09–18–28 CARGO COMPARTMENT LIGHT REMOVAL/INSTALLATION.)
   (14) Trunk side trim (See 09–17–19 TRUNK SIDE TRIM REMOVAL/INSTALLATION.)
   (15) Second-row seat belt upper anchor installation bolt (See 08–11–3 SECOND-ROW SEAT BELT REMOVAL/INSTALLATION.)
   (16) C-pillar trim (See 09–17–17 C-PILLAR TRIM REMOVAL/INSTALLATION.)
   (17) RES unit cover (vehicles with RES) (See 09–20–25 RES UNIT REMOVAL/INSTALLATION.)
   (18) Map light (See 09–18–24 MAP LIGHT REMOVAL/INSTALLATION.)
   (19) Sunvisor (See 09–17–21 SUNVISOR REMOVAL/INSTALLATION.)
   (20) Assist handle (See 09–17–21 ASSIST HANDLE REMOVAL/INSTALLATION.)
   (21) Headliner (See 09–17–22 HEADLINER REMOVAL/INSTALLATION.)
2. Remove in the order indicated in the table.

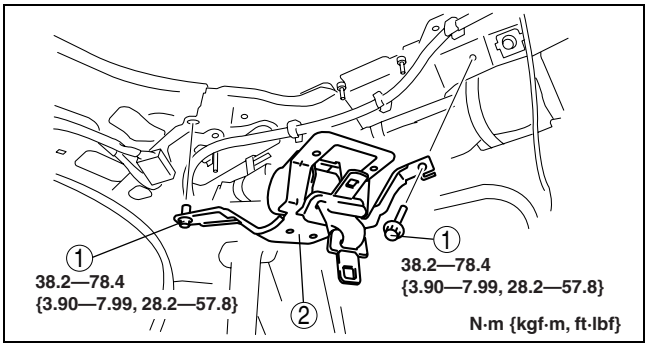

DPE811ZW1012

1	Bolt A
2	Bolt B
3	Second-row center seat belt

3. Install in the reverse order of removal.

Type B

1. Remove the second-row seat. (See 09–13–5 SECOND-ROW SEAT REMOVAL/INSTALLATION.)
2. Remove the seat under tray. (See 09–13–5 SECOND-ROW SEAT DISASSEMBLY/ASSEMBLY.)

3. Remove in the order indicated in the table.

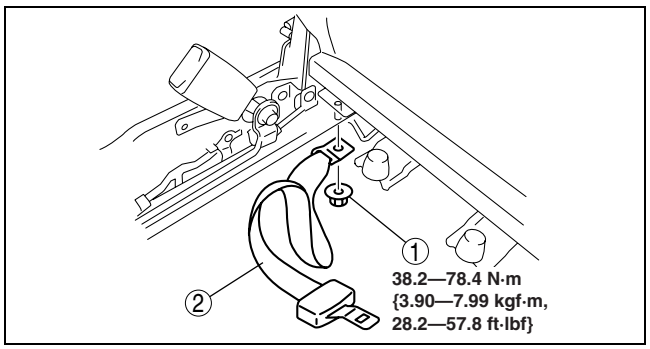

DPE811ZW1006

1	Nut
2	Second-row center seat belt

4. Install in the reverse order of removal.

THIRD-ROW SEAT BELT REMOVAL/INSTALLATION

DPE081157830W03

Caution

- **The ELR (emergency locking retractor) has a spring that will unwind if the retractor cover is removed. The spring cannot be rewound by hand. If this occurs, the ELR will not work properly. Therefore, do not disassemble the retractor.**

1. Remove the following parts:
   (1) Rear package tray lid (See 09–17–20 REAR PACKAGE TRAY LID REMOVAL/INSTALLATION.)
   (2) Third-row seat (See 09–13–8 THIRD-ROW SEAT REMOVAL/INSTALLATION.)
   (3) Rear scuff plate (See 09–17–19 REAR SCUFF PLATE REMOVAL/INSTALLATION.)
   (4) Trunk end trim (See 09–17–20 TRUNK END TRIM REMOVAL/INSTALLATION.)
2. Remove the bolt A.
3. Remove the trunk side trim. (See 09–17–19 TRUNK SIDE TRIM REMOVAL/INSTALLATION.)
4. Remove the rear header trim. (See 09–17–20 REAR HEADER TRIM REMOVAL/INSTALLATION.)
5. Detach the bezel from the C-pillar trim.
6. Remove the C-pillar trim. (See 09–17–17 C-PILLAR TRIM REMOVAL/INSTALLATION.)
7. Remove the bolt B.
8. Remove the third-row seat belt.
9. Install in the reverse order of removal.

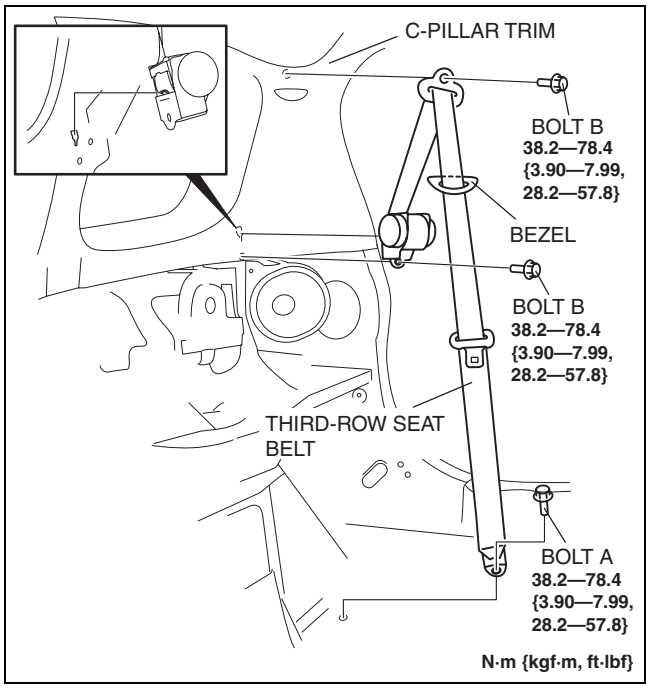

DPE811ZW1007

FRONT BUCKLE REMOVAL/INSTALLATION

DPE081157620W01

1. Disconnect the negative battery cable.
2. Remove the front seat. (See 09–13–1 FRONT SEAT REMOVAL/INSTALLATION.)

3. Detach the tab as shown in the figure and remove the connector from the front seat connector.

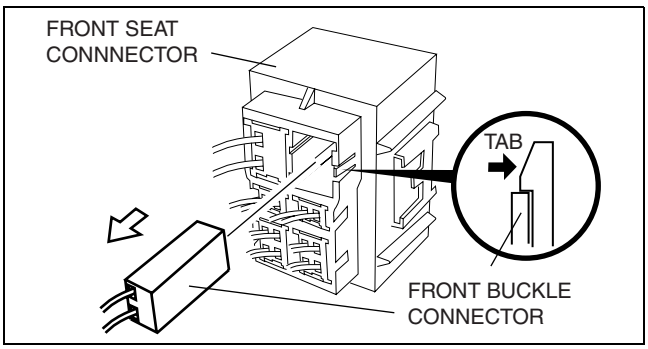

DPE811ZW1013

4. Remove in the order indicated in the table.

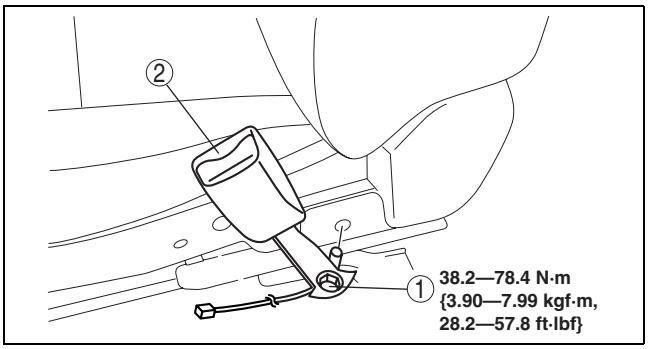

DPE811ZW1008

1	Bolt
2	Front buckle

5. Install in the reverse order of removal.

SECOND-ROW BUCKLE REMOVAL/INSTALLATION

DPE081157720W01

1. Remove the second-row seat. (See 09–13–5 SECOND-ROW SEAT REMOVAL/INSTALLATION.)
2. Remove the seat under tray. (See 09–13–5 SECOND-ROW SEAT DISASSEMBLY/ASSEMBLY.)
3. Remove the bolt.
4. Detach the spring hook.
5. Detach the rod.
6. Install in the reverse order of removal.

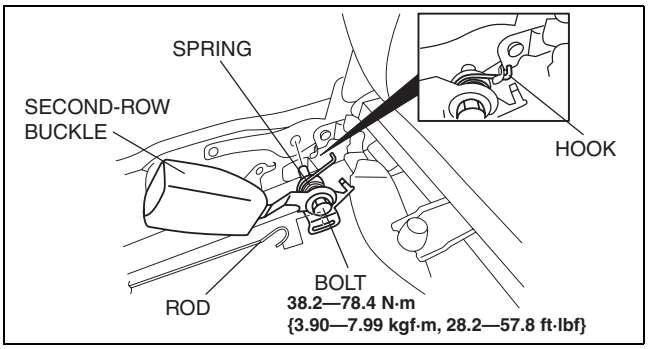

DPE811ZW1009

SECOND-ROW CENTER BUCKLE REMOVAL/INSTALLATION

DPE081157720W02

1. Remove the second-row seat. (See 09–13–5 SECOND-ROW SEAT REMOVAL/INSTALLATION.)
2. Remove the seat under tray. (See 09–13–5 SECOND-ROW SEAT DISASSEMBLY/ASSEMBLY.)
3. Remove in the order indicated in the table.

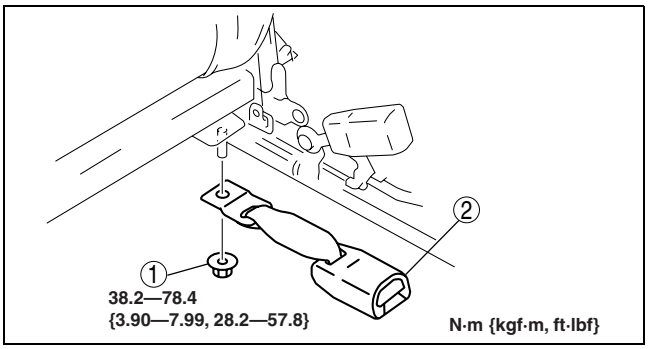

DPE811ZW1010

1	Nut

2	Second-row center buckle

4. Install in the reverse order of removal.

THIRD-ROW BUCKLE REMOVAL/INSTALLATION

DPE081157720W03

1. Remove the rear package tray lid. (See 09–17–20 REAR PACKAGE TRAY LID REMOVAL/INSTALLATION.)
2. Remove the floor covering installation fasteners installed to the third row seat.
3. Remove in the order indicated in the table.

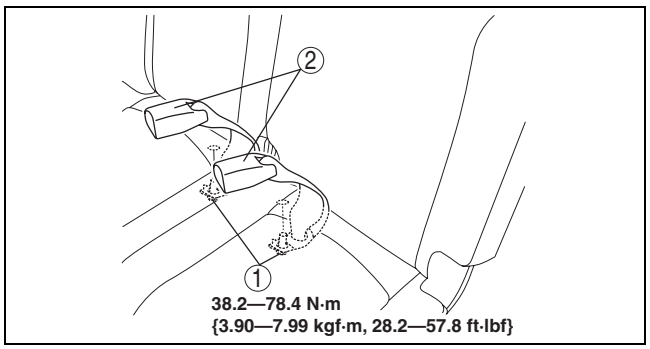

DPE811ZW1011

1	Bolt
2	Third-row buckle

4. Install in the reverse order of removal.

SEAT BELT INSPECTION

DPE081157000W02

Belt

1. Verify that the belt is installed properly with no twists or kinks.
2. Verify that there is no damage to the seat belt and no deformation of the metal fittings.
   - If there is any malfunction, replace the seat belt.

ELR

1. Verify that the belt can be pulled out smoothly, and that it retracts smoothly.
   - If there is any malfunction, replace the seat belt.
2. Verify that the retractor locks when the belt is pulled quickly.
   - If there is any malfunction, replace the seat belt.
3. Remove the retractor.

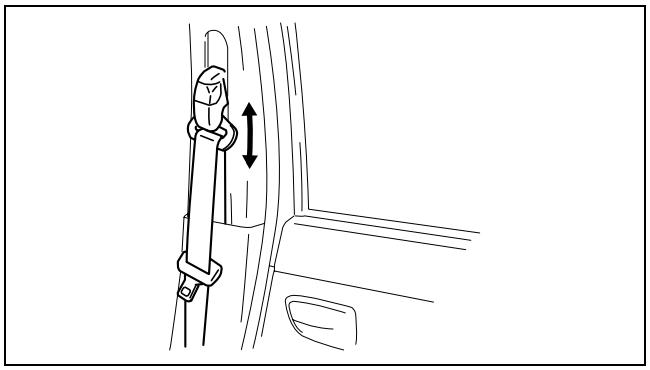

B3E0811W011

4. While pulling the seat belt out, make sure that the seat belt does not lock when the retractor is tilted slowly **up to 15°** from the mounted position and locks when the retractor is tilted **40° or more**.
   - If there is any malfunction, replace the seat belt.

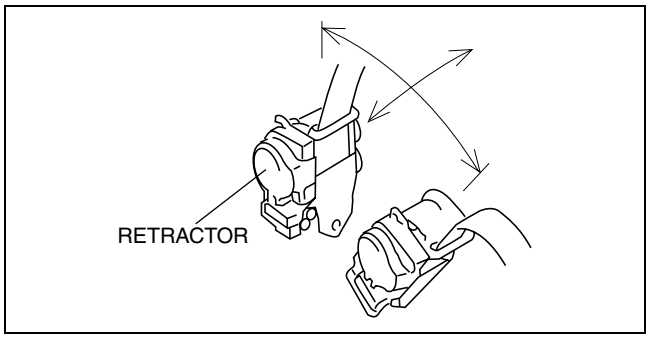

B3E0811W009

Load Limiter Retractor

Warning

- **When the load limiter operates, the belt and anchor rub against each other strongly leaving wear**

tracks. If the seat belt is used in this state, the seat belt will not function at its full capability and there is the possibility of serious injury to passengers. Be sure to replace the seat belt once the load limiter operates.

1. If the vehicle has been subjected to a shock in an accident, pull the belt from the retractor and confirm that there are no wear tracks (the load limiter has not operated) by visually inspecting and feeling the belt.
   - If there is any malfunction, replace the seat belt.

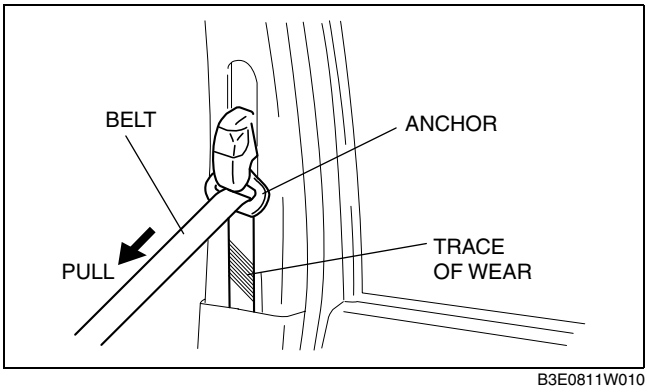

B3E0811W010

08–60 SERVICE TOOLS

RESTRAINTS SST 08–60–1

RESTRAINTS SST

DPE086000000W01

49 H066 002 Deployment tool 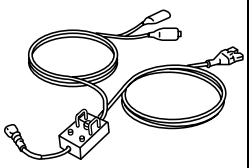	49 B066 004 Adapter harness 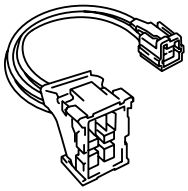	49 L066 002 Adapter harness
49 N088 0A0 Fuel and Thermometer checker 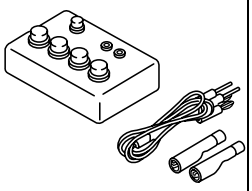	WDS 	—